GUILD ◆ EDITION

Woodsmith®

Woodsmith.com

Vol. 43 / No. 257

FINE TOOL CABINET

Also:

Simple, Safe
Table Saw Outfeed Stand

Take Care of Your
Router Bits

Unique Project Plans:

- Snow Sled
- Mid-Century Bench
- Finishing Supplies Cabinet

Woodpeckers®

Precision Woodworking Squares

- One-piece central core machined to exacting tolerance.
- Stainless model includes scribing guides for perfect parallel layout.
- Lip formed by base keeps the square flat on your work.
- Scales engraved to a tolerance of ±.004" total stack-up error.
- Guaranteed accurate to ±.0085° for life.
- Available in inch or metric graduations.

Precision Woodworking Square
Includes a Woodpeckers wall-mountable wooden case
12" 1281....$129.99
12" 1282SS Stainless Steel....$139.99
Other Sizes Available on Woodpeck.com

Precision T-Squares

- Precisely spaced 1mm holes machined every 1/16".
- Laser engraved scale accurate to ±.004".
- Outer edges machined to a 30° bevel for easy reading.
- 600mm metric version available.

Precision T-Square
Includes a wall-mountable Rack-It™
TS-12 12"....$89.99
TS-24 24"....$124.99
TS-32 32"....$154.99

Precision Taper Jig

- Produce tapers from 0° to 15° safely & accurately.
- Clamp material securely to sacrificial base.
- Standard 32" capacity can expand to 48".
- Clamp handles provide safe and secure gripping points.

Precision Taper Jig
32"....$279.99
48"....$399.99

Clamping Squares PLUS & CSP Clamps

- Positions stock at right angles for joinery & fastening.
- Precision milled for both inside & outside alignment.
- Works with any clamp.
- CSP Clamps add speed & convenience.

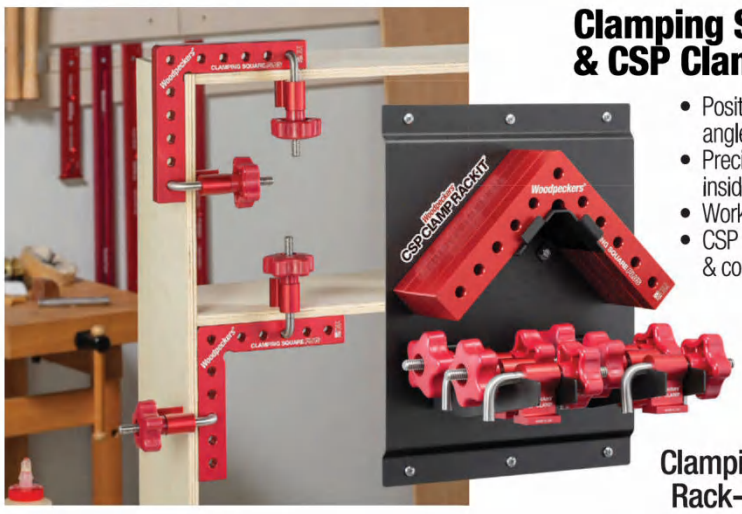

Clamping Squares PLUS Rack-It™ Kit....$259.99

in-DEXABLE™ Combination & Double Squares

- Push-button index locks head at any full-inch.
- Laser-cut scribing guides for precision parallel lines.
- Retractable support keeps head aligned to your stock.
- Combination & Double Squares in two sizes.

***in-DEXABLE* Squares**
Includes a wall-mountable Rack-It™
Double 6"....$129.99
Double XL 12"....$169.99
Combination 12"....$169.99
Combination XL 18"....$199.99
Set w/ MDF Wall Case....$649.99

EZ Edge Corner Plane

- Plane sole is a perfect 90° to fit your stock.
- 3 radius profiles and 45° chamfer available.
- Hardened blades are easy to re-hone.
- Profile perfectly centered on your stock.

EZ Edge Corner Plane
Includes a wall-mountable Rack-It™
1/8", 3/16", 1/4" Radius
-or- 45° Chamfer....$159.99
Deluxe Set....$569.99

DP·PRO Drill Press Table System

- DP·PRO Fence integrates dust collection & delivers accuracy.
- Micro-adjustable DP·PRO Flip Stops.
- DP·PRO Drawer Base simplifies installation on any drill press.
- DP·PRO Tables are full 1" thick with laminate top & bottom.
- Extension Wings for long material support.
- Drawer Base and Fence compatible with all drill press tables.

Drill Press & Hose not included.

DP·PRO Drill Press Table Master System
36" Table, 24" Fence.....$399.99
36" Table, 36" Fence.....$419.99
48" Table, 36" Fence.....$449.99
48" Table, 48" Fence.....$469.99

Woodpeckers, LLC • Strongsville, Ohio • 800·752·0725 • *Woodpeck.com*

Woodpeck.com

MADE IN USA

AUTO-LINE DRILL GUIDE™

NEW TOOL

- Drill perfectly perpendicular holes anywhere.
- Fence fits on all 4 sides and works 4 different ways.
- Laser-engraved target lines indicate center of bit.
- Works with nearly all 1/2" and smaller drills.
- 1" capacity inside frame and 2" capacity outboard.
- Optional extensions and stops available.

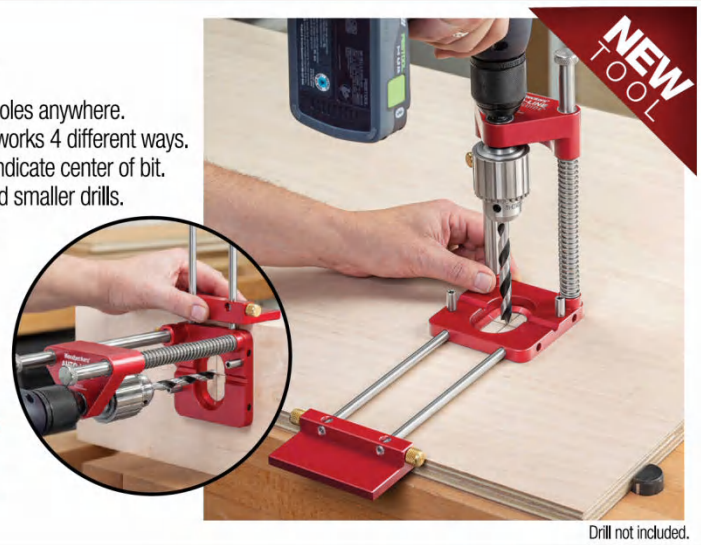

Auto-Line Drill Guide
Drill Guide....$259.99
Deluxe Kit....$369.99

Drill not included.

MORTY™ Loose Tenon Joinery Jig

NEW TOOL

- Use your router to cut perfect mortises in 7 standard sizes.
- Mortises match the size and shape of the Festool Domino.
- Template adjusts for angled mortises.
- Index pins and adjustable stop simplify joinery.
- We sell bulk tenon stock for Morty and Domino.

Morty Loose Tenon Joinery Jig
Basic....$439.99
w/ Rack-It™ $539.99
w/ Systainer Case....$639.99
Tenon Stock Available on ***Woodpeck.com***

Multi-Function Router Base

NEW TOOL

- Micrometer adjustment positions cutter perfectly.
- Cut parallel to existing edge or pivot in a perfect arc.
- Wide, stable base improves routing accuracy.
- Works with most routers that have guide rod holes.

Multi-Function Router Base
Includes 1 Pair Extension Rods
w/ 5/16" Guide Rods....$239.99
w/ 3/8" Guide Rods....$239.99
w/ 10mm & 1/4" Guide Rods....$239.99

Router not included.

Exact-90 Miter Gauge

NEW TOOL

- Perfectly square cuts every time.
- Patent pending miter bar adjusts to any 3/4" miter slot.
- Graduated fence with micro-adjustable flip stop and 45" extension.
- Extra-long miter bar increases cross-cut capacity of most saws to 24".
- Miter Bar available separately to build jigs and cut-off tables.

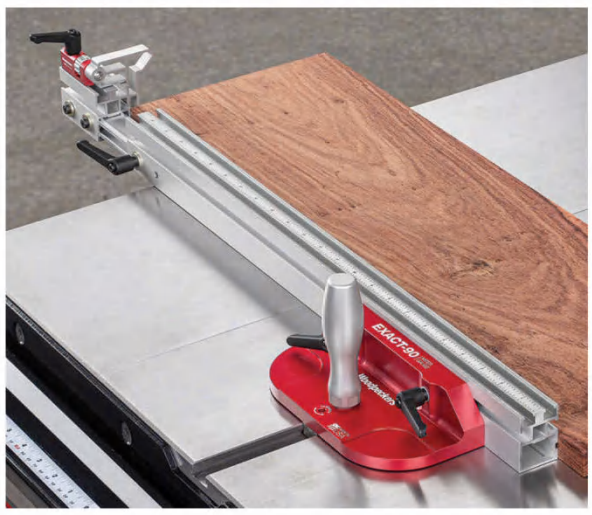

Exact-90
Miter Gauge....$299.99
25.5" Miter Bar....$69.99

RIP-FLIP Fence Stop System™

- Bring your rip fence back to the same spot each and every time you need it.
- Stop drops out of the way when not needed, flips up when you want it.
- Couple two stops together for perfect fitting dadoes in two cuts.
- Models available for SawStop T-Glide Fences* and Powermatic Accu-Fences*.
- Extra stops and dado couplers available. Add as many as you need!

RIP-FLIP Fence Stop System
36" Capacity - *Fits SawStop**....$209.99
30" Capacity - *Fits Powermatic**....$219.99
52" Capacity - *Fits SawStop**.....$219.99
50" Capacity - *Fits Powermatic**....$229.99

Slab Flattening Mill·PRO

- Wider, thicker, thinner & cleaner than the original.
- Router carriage now has adjustable height & built-in dust ports.
- Standard width of 48-1/2" expands to 62" with optional extension.
- Standard length of 59" expands to 132" with optional extension.
- Flatten stock as thin as 3/4" & up to 3-7/16" without shimming.
- Straight-line edges on stock up to 2" thick.

Rail can be positioned for narrower slabs or all the way to the edge!

Slab Flattening Mill·PRO
Basic.....$899.99
Extended.....$1199.99

For more sizes & ordering options for these tools plus hundreds more, visit ***Woodpeck.com***

**NOTE: The Festool, DF-500, DF-700 XL, SawStop & Powermatic brand names are the registered trademarks of the respective companies and are not associated with Woodpeckers, LLC.*

Woodsmith®

AN ACTIVE INTEREST MEDIA PUBLICATION

EXECUTIVE EDITOR Phil Huber
SENIOR EDITOR Erich Lage
ASSISTANT EDITOR Rob Petrie
CONTRIBUTING WRITERS Logan Wittmer

EXECUTIVE ART DIRECTOR Todd Lambirth
SENIOR ILLUSTRATOR Dirk Ver Steeg
SENIOR GRAPHIC DESIGNERS Bob Zimmerman, Becky Kralicek
CONTRIBUTING ILLUSTRATOR Erich Lage

CREATIVE DIRECTOR Chris Fitch
PROJECT DESIGNER Dillon Baker
PROJECT DESIGNER/BUILDER John Doyle
CAD SPECIALIST/BUILDER Steve Johnson
SHOP CRAFTSMAN Marc Hopkins
CONTRIBUTING PHOTOGRAPHERS Chris Hennessey, Jack Coyier

HOME GROUP
ACTIVE INTEREST MEDIA

ADVERTISING SALES DIRECTOR Heather Glynn Gniazdowski
DIRECTOR OF PRODUCTION Phil Graham
CREATIVE DIRECTOR Edie Mann
CATAPULT CREATIVE LABS Amanda Phillips
FINANCE MANAGER Bart A. Hawley
CIRCULATION DIRECTOR Paige Nordmeyer
DIRECTOR OF RETAIL SALES Susan A. Rose
ADVERTISING DIRECTOR Jack Christiansen
847-724-5633
jchristiansen@aimmedia.com
AD PRODUCTION COORDINATOR Kim Hoff
GRAPHIC DESIGNER Julie Green

Woodsmith® (USPS 465-410) (ISSN 0164-4114) is published bimonthly by the Home Group of Active Interest Media Holdco, Inc. The known office of publication is located at 2143 Grand Ave, Des Moines, IA 50312. Periodicals Postage Paid at Des Moines, IA, and additional mailing offices. Postmaster: Send address changes to Woodsmith, Box 37274, Boone, IA 50037-0274.

Woodsmith® is a registered trademark of Active Interest Media Holdco, Inc.
Copyright© 2021 Active Interest Media Holdco, Inc. All rights reserved.
Subscriptions: $29/year, Single copy: $7.99
Canadian Subscriptions: Canada Post Agreement No. 40038201. Send change of address information to PO Box 881, Station Main, Markham, ON L3P 8M6.
Canada BN 82564 2911

Printed in U.S.A.

WoodsmithCustomerService.com

ONLINE SUBSCRIBER SERVICES

- **VIEW** your account information
- **PAY** your bill
- **RENEW** your subscription
- **CHANGE** your mailing or e-mail address

CUSTOMER SERVICE Phone: **800-333-5075** weekdays

SUBSCRIPTIONS
Customer Service
P.O. Box 842
Des Moines, IA 50304-9961
subscriptions@aimmedia.com

EDITORIAL
Woodsmith Magazine
2143 Grand Avenue
Des Moines, IA 50312
woodsmith@woodsmith.com

ACTIVE INTEREST MEDIA

PRESIDENT, HOME GROUP **Peter H. Miller**
PRESIDENT, MARINE GROUP **Gary De Sanctis**
CTO **Brian Van Heuverswyn**
SENIOR VICE PRESIDENT, OPERATIONS **Pat Fox**
CHAIRMAN **Andrew W. Clurman**
CHAIRMAN EMERITUS **Efrem Zimbalist III**

from the editor

Sawdust

One of the advantages of working at Woodsmith is following a project from sketch to the finishing spray booth. Chris, Dillon, and John recently put together a line up for the next year. And I can't wait to see how these concepts take shape. Each of the designers applies their unique spin on the design process. Then Steve and Marc have to make it a reality in the shop.

While I'd like you all to stop in and watch the process unfold, it's not really practical. However, you can follow along if you join us for our weekly shop updates on Facebook. Every Thursday at 1pm central time, we turn on the cameras for a tour and a progress report on projects you'll soon see here.

Another way you can participate in the process is to send us project ideas. We're always looking for fun and unique ideas that we can bring to life. So send us a photo, or drop a note describing what you'd like our team to tackle. Send the ideas to Woodsmith@Woodsmith.com.

Happy Woodworking!

ROB PETRIE, ASSISTANT EDITOR

◄ Rob's passion for woodworking began when he was six, whittling sticks with a pocketknife after watching his dad work in their family's shop, eventually graduating to cutting boards, to cabinetry, and beyond. As a professional writer and woodworking enthusiast, Rob's happiest when he's making something, whether it's in the shop or at the keyboard. He appreciates the combination of artistry and functionality that woodworking provides most of all, giving you both something beautiful to look at and useful to have. When Rob isn't in the shop or at the office, you can probably find him biking on a trail somewhere in Iowa. If you're out there, just look for the wood-grain helmet!

PRIVACY STATEMENT: Active Interest Media HoldCo, Inc. is committed to protecting your privacy. For a full copy of our privacy statement, go to aimmedia.com/privacy-policy. COPYRIGHT: 2021 by Active Interest Media HoldCo, Inc., Boulder, Colorado. This publication may not be reproduced, either in whole or part, in any form without written permission from the publisher.

contents

No. 257 • October/November 2021

Projects

designer project
Backpack & Satchel 24
These trim and sleek projects show that there's more to woodworking than furniture.

shop project
Tool Cabinet 32
This two-part cabinet is a clinic in classic joinery techniques. And it houses a lot of tools in a small space

designer project
Snow Sled 42
This Alpine-inspired sled delights both in the workshop and out on the slopes.

shop project
Flame-Resistant Storage Cabinet. 48
This cabinet raises the safety level of your shop by protecting finishing supplies from fire.

heirloom project
Hall Bench 54
Here's a tribute to streamlined design and construction. And you get some extra seating to boot.

Departments

from our readers
Tips & Techniques 6

all about
Trimming Doors & Windows 12

woodworking essentials
Chisel Tips & Techniques. 16

router workshop
Router Bit Maintenance 18

woodworking technique
Installing Concealed Hinges 60

mastering the table saw
Outfeed Support 64

Sources 66

READER'S Tips

Give an old, rusty grill new life as a cart for your wood shop.

SUBMIT A TIP TO WIN

GO ONLINE

If you have an original shop tip, we would like to hear from you and consider publishing your tip in one or more of our publications. So jump online and go to:

SubmitWoodsmithTips.com

You'll be able to tell us all about your tip and upload your photos and drawings. You can also mail your tips to "Woodsmith Tips" at the editorial address shown on page 2. We will pay up to $200 if we publish your tip.

Grill Frame Shop Cart

If you're throwing out an old grill, or (in my case) if you found one on the curb, then you may have found your next shop cart. A grill ended up being a great base for a shop cart. You've got a ready-built frame with a set of casters already mounted. I made mine into a sharpening station, but you can get creative: a planer cart, a bench-top tool stand, or a moving miter saw station are just a few ideas.

MAKING THE CART. To start, I pulled off all the pieces aside from the frame and casters, then cleaned the grill up. I used long pan-head sheet metal screws to attach ¾" plywood for the woksurfaces, which also added some rigidity to the old frame. The grill I converted had a pop-up shelf that, with a little more plywood, became an extra worksurface.

Dave Hahn
Shippensburg, Pennsylvania

▲ A pair of holes serving as handles make this shop cart easy to wheel around.

▲ The original utensil hooks are a great place to hang tools and safety equipment.

Illustrations: Becky Kralicek

New Optima™ CHISELS

Lapped & Polished
Perfectly Flat
Surgically Sharp
Stunningly Beautiful

Blue Spruce
TOOLWORKS

Imagine a chisel perfectly flat and surgically sharp right out of the box…introducing our new *Optima Chisels*. Each chisel back is perfectly lapped and polished to give you unrivaled flatness. Each bevel is individually ground and honed by skilled craftsmen. The double-tempered and cryogenically treated A2 steel blades have the fine grain structure needed for surgical level sharpness and the durability to keep it. And, like all Blue Spruce Tools, they're a delight to hold, admire and use.

Visit our website to learn more about these remarkable new tools. **BlueSpruceToolworks.com**

Strongsville, Ohio • 877·828·0332

QUICK TIPS

Finest Finish. *Phil Huber* of *Urbandale, IA* had sanded up through the grits and put the final coat of finish on his platter. Before he called it done though, he did one last sanding with kraft paper. The paper has just enough abrasiveness to create a smooth surface and consistent sheen.

Cooking Out the Water. *Dana Myers* of *Beaverdale, IA* realized that her dowels had swollen in the humid weather and wouldn't fit in the holes for her dowel joints. She decided to cook them in the mircrowave in 30 second increments to dry them back to their normal size.

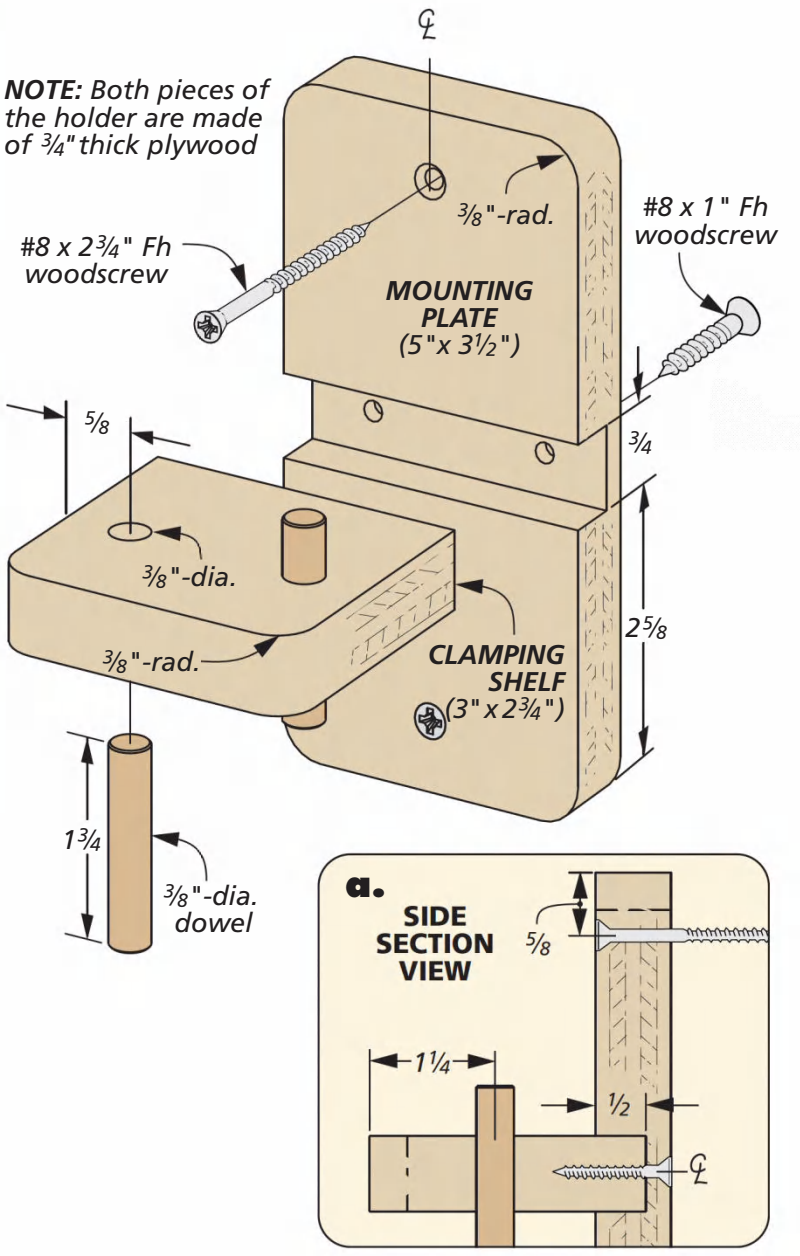

Clamp-on Light Holder

Sometimes I like a bit of extra light in my shop, but there isn't always a good place for a lamp. To solve this problem, I devised a holder for a clamp-on lamp that can be placed almost anywhere. The holder is made of ¾" plywood. A dado in the mounting plate accepts a small clamping shelf, as you can see to the right. The clamps grasp the plywood shelf, fitting around the pair of dowels. The dowels keep the lamp from sliding off when you adjust the angle.

Guy Gerrard
Orlando, Florida

ENGRAVE | CUT | INLAY

- Laser engrave & cut wood at the touch of a button
- Customize woodworking projects for added value
- Laser system work areas up to 40" × 28"
- Wattage configurations up to 120
- USA made

EpilogLaser

888.437.4564 | sales@epiloglaser.com | www.epiloglaser.com/woodsmith

Circular Saw Edge Guide

It's not always easy to get a straight cut with a circular saw by hand. Build this shop-made guide and you'll be making consistent rips and crosscuts easily.

PLYWOOD BASE. This guide starts with a ½" thick plywood sheet for the base. The base should be 2" wider than your saw's base, and the cutout in the plywood base should match your saw's cutout. A long slot in the base allows a fence underneath to be adjusted depending on how wide you need your cut to be. To finish the base, cut two ⅛" deep grooves in the bottom for the fence keys. These grooves will span from the end of the base to the cutout.

SECURING CLEATS. The cleats here frame the saw, keeping it in place while you make your cut. Measure out where the two side cleats need to be for your saw's base and attach them. The front of your saw base will slip underneath the hardboard lip of the front cleat while the rear cleat, held in place with a threaded knob and T-nut, can then be tightened down to secure the back of the saw. The base of each cleat is simply made from scrap to match the height of the saw base.

FENCE GUIDE. Finally, add a 2" plywood fence with two grooves in the bottom for the fence keys. A guide strip is added for a smoother surface to ride against the piece while cutting. The keys keep the fence parallel to the blade, and as long as the fence stays flat against the workpiece, your cuts will stay straight.

Rob Petrie
Des Moines, Iowa

► The only limit on cutting capacity is the size of the base. This version can make up to 10" rip cuts.

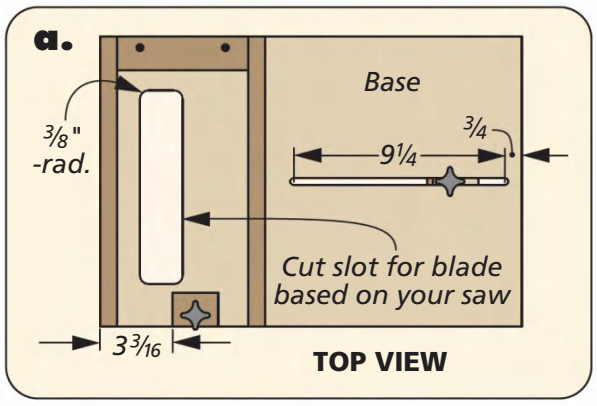

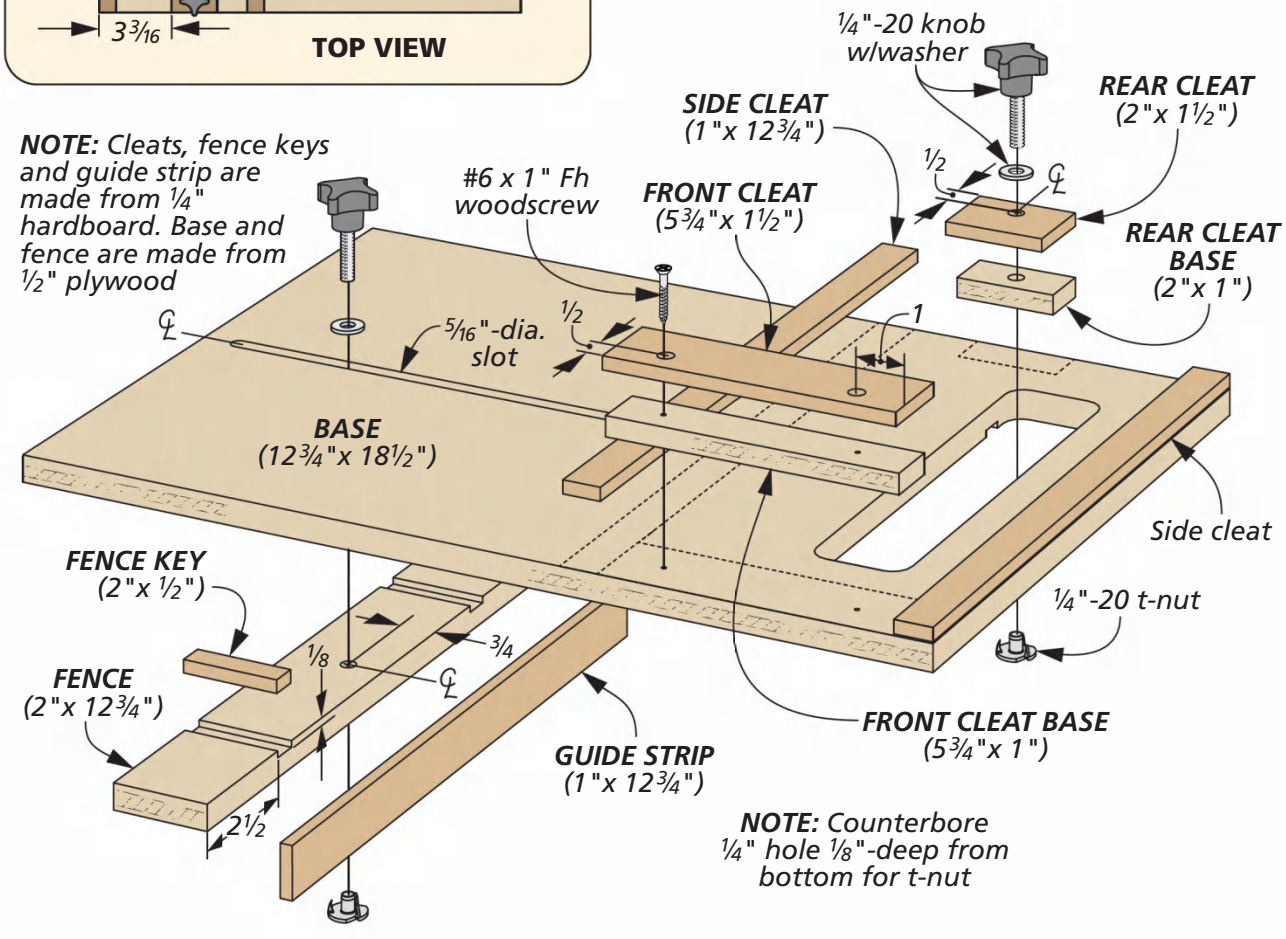

QUICK TIPS

Surgical Tubing Clamp. *Chris Fitch* of *Winterset, IA* came up with this clever clamp when trying to glue up a bandsaw box, which has tapered and curved edges. The tubing can be stretched and wrapped to fit any shape, while the latex provides a sure grip. After wrapping tightly, the tubing can be tied off at any length you need for that project.

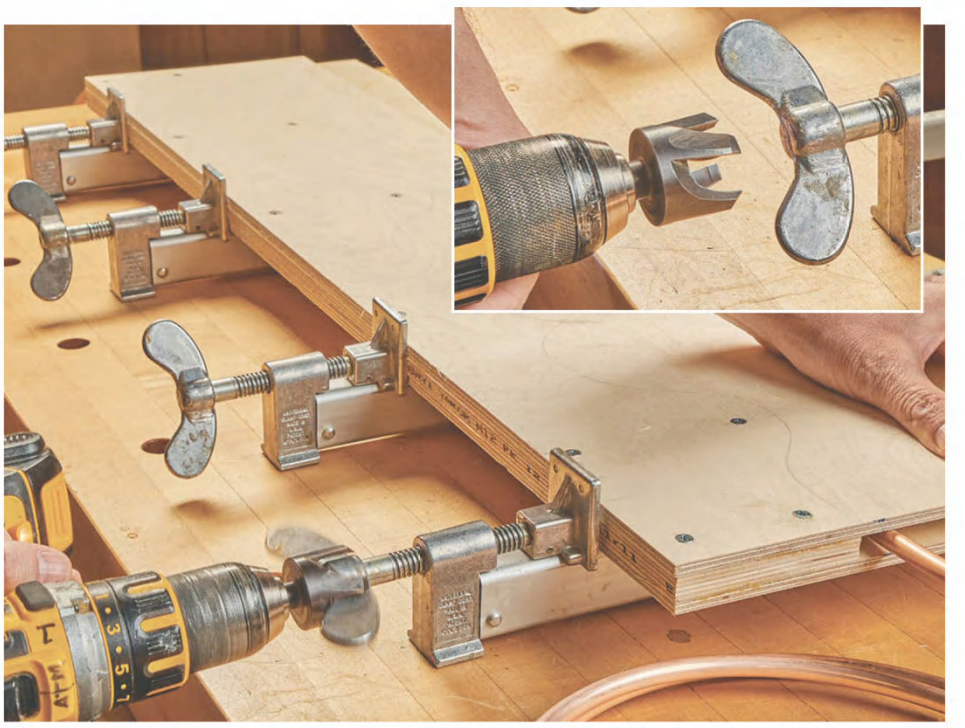

Plug Cutter Clamping. *John Doyle* of *Ankeny, IA* was using a bending form to shape pieces of copper, which meant tightening, untightening, and tightening those bar clamps over again. Then he noticed a 1″ plug cutting bit collecting dust. The gaps in the teeth were large enough to fit around the clamp handle. By chucking the cutter up in a drill, he could quickly loosen or tighen his clamps, saving him some significant time.

ALL About

Casing Doors & Windows

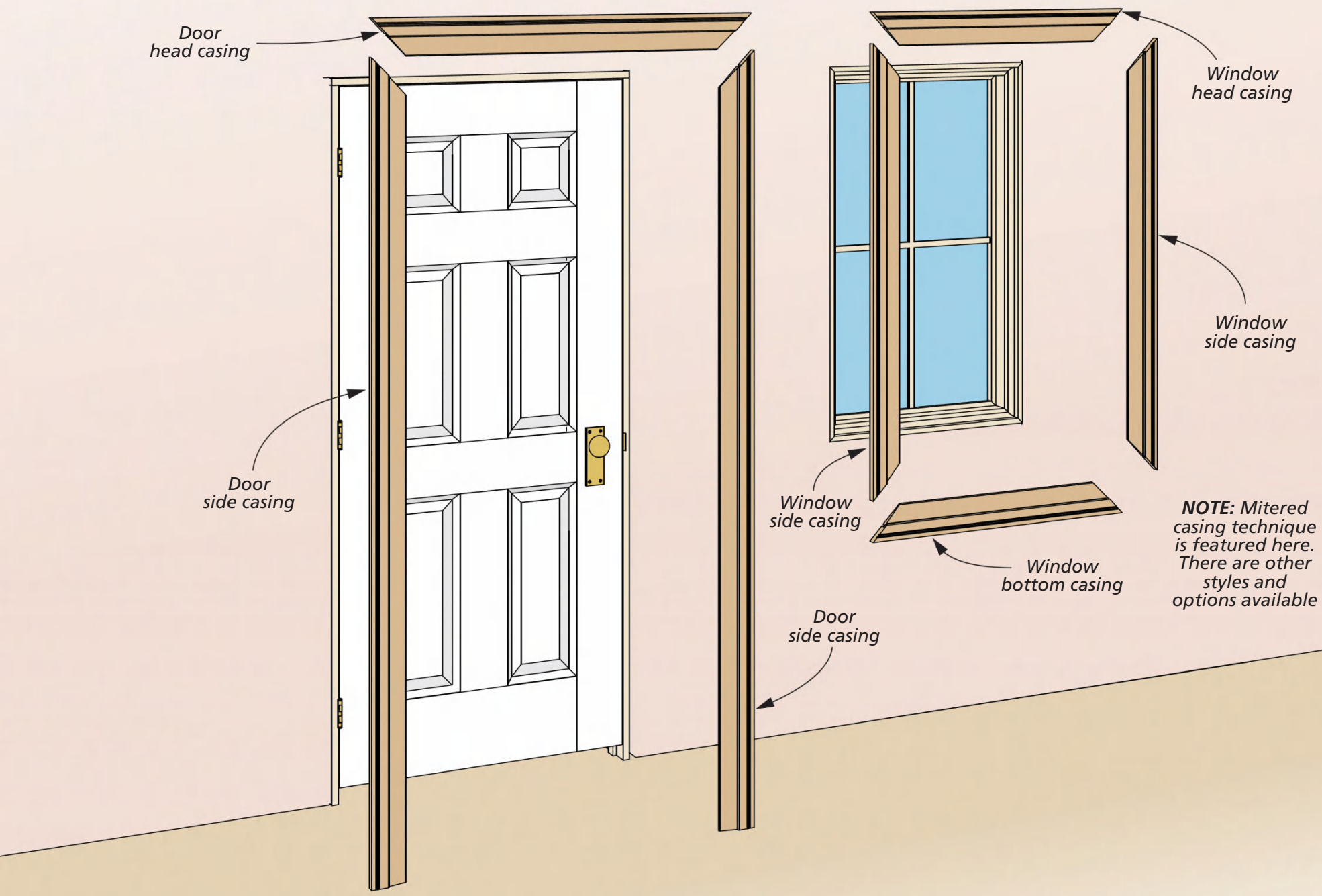

Casing a door, or window, is a perfect example of one of the fundamental differences between trim carpentry and conventional woodworking. In woodworking, you're building from scratch and have complete control over the process. Adding casing to doors and windows is just that — adding. It's a different ball game.

Casing comes in all sorts of varieties and sizes. These thin, long pieces of trim can be combined with plinth blocks in doors, or aprons and stools in windows, as well. But here I'm going to focus on a simple method of adding casing that's mitered at the corners and wraps the perimeter of the door and window that you see in the drawing above.

The steps I'm showing in this article will get you headed in the right direction. Now I'll mention a few more tools that will help along the way.

TOOLS. A good miter saw with a sharp blade is a must if you want clean crisp cuts. That's what you want, right? Next, fasteners to attach the casing. On the inside of the casing you'll use a smaller nail (#4 finish, or 15-18 gauge nails in your nail gun). They're also used to pin the miters together. The outside of the casing calls for a #6 finish nail, or 15 gauge 2½" nails. Glue, a wet rag, and sandpaper are also handy to have close at hand. One more thing, a putty knife, the kind that has a wide thin blade, will be a good friend to have.

Written and Illustrated by: Erich Lage

CASING A DOOR

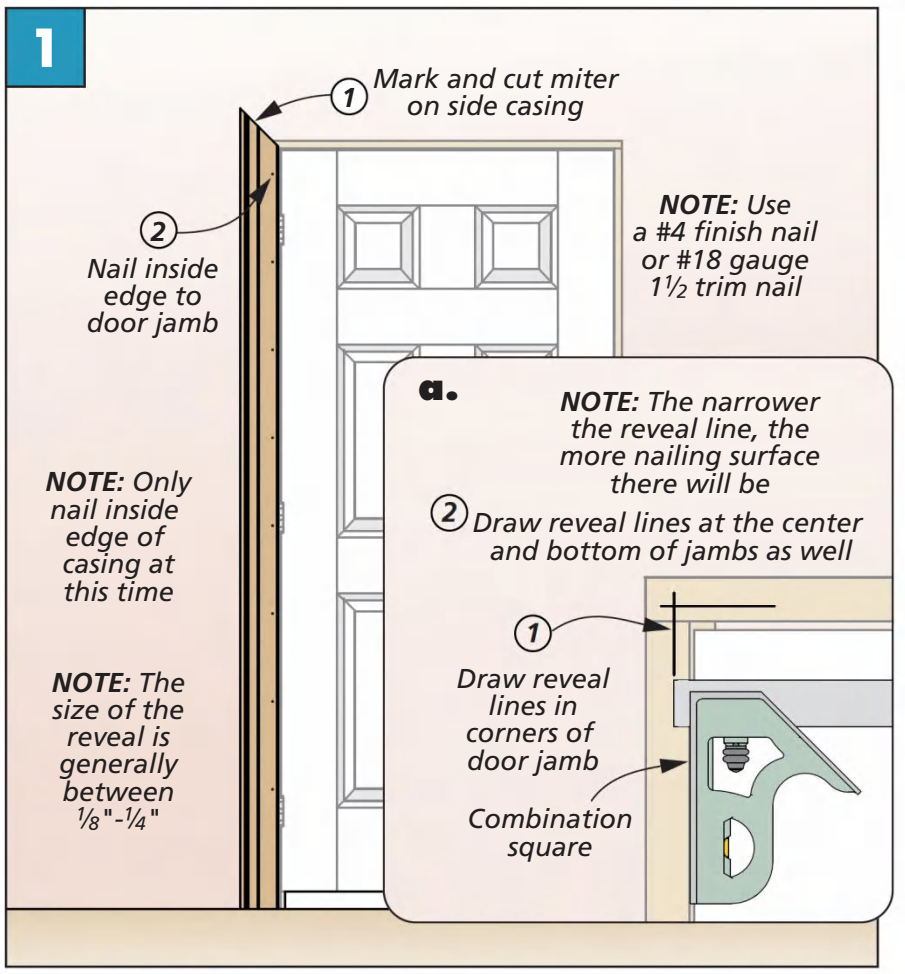

No Measuring. Draw lines in the corners of the door jamb and along the edges for casing location. After cutting the miter, nail just the inside of the casing.

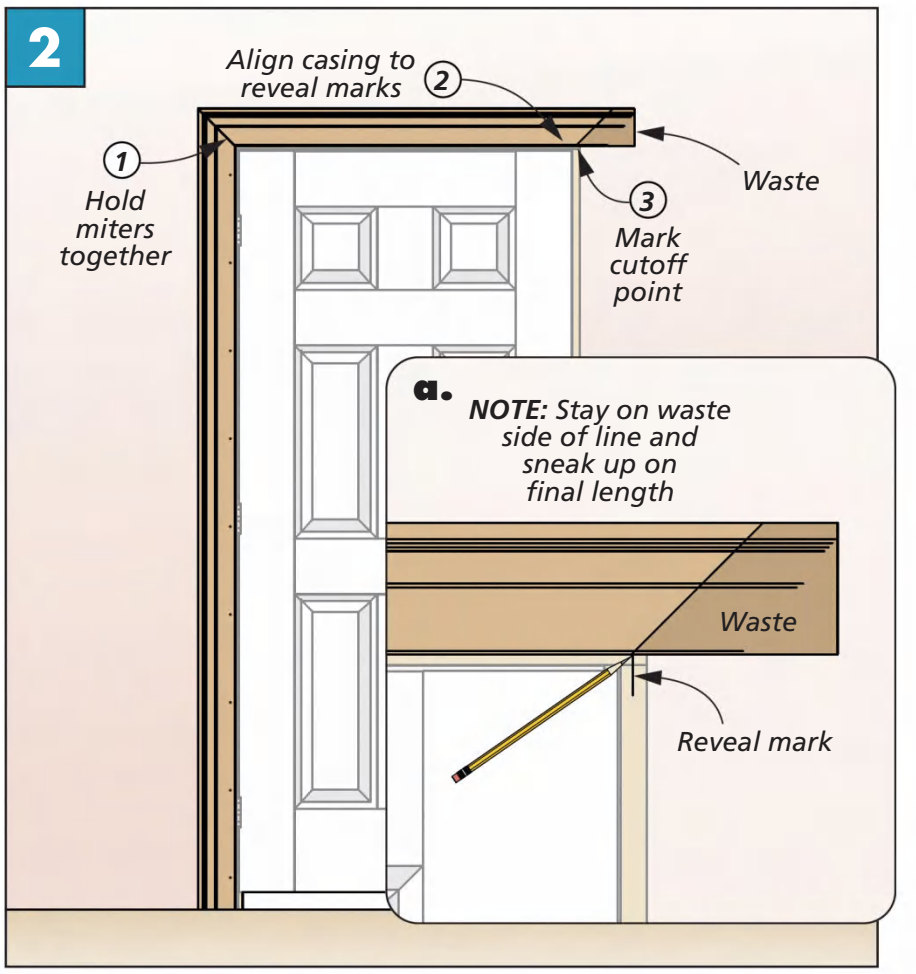

Matching Miters. Cut the mating miter on the head casing and hold it in place on the jamb. Mark the location of the opposite miter on the other end of the casing.

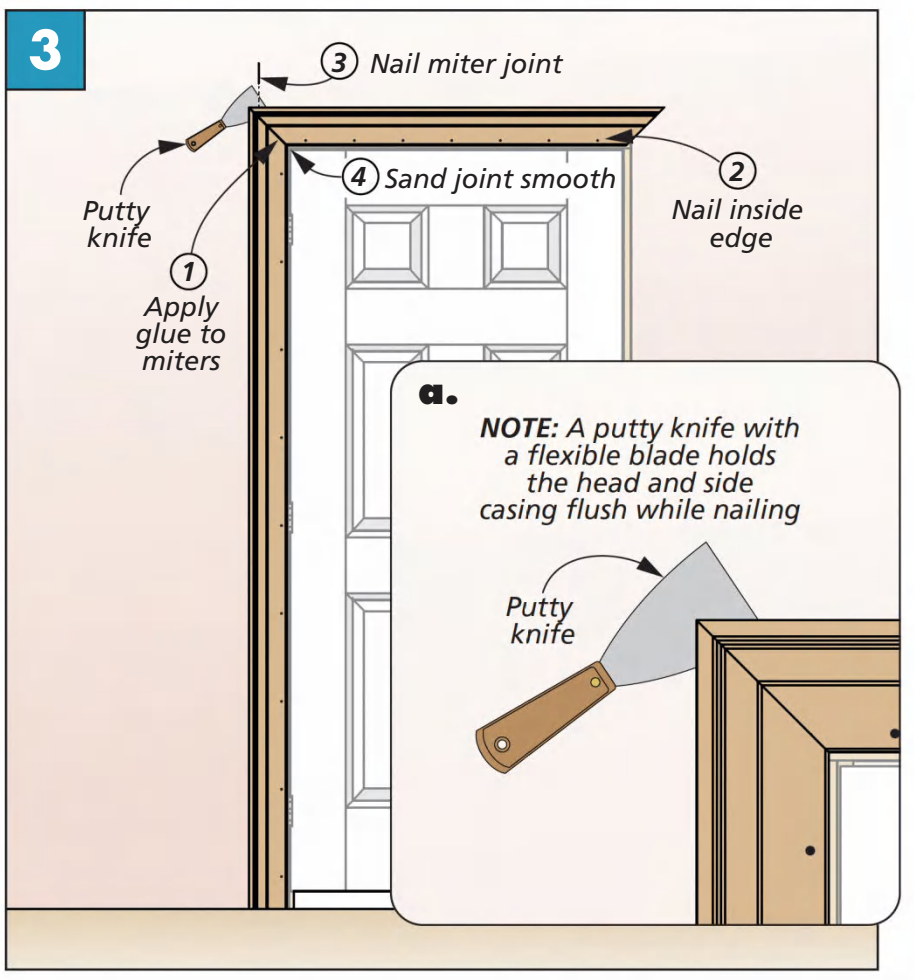

Clean Up The Joint. After applying glue to the mitered ends, nail the inside edge only. Use a flexible putty knife to hold outer end of the casing miters flush while nailing.

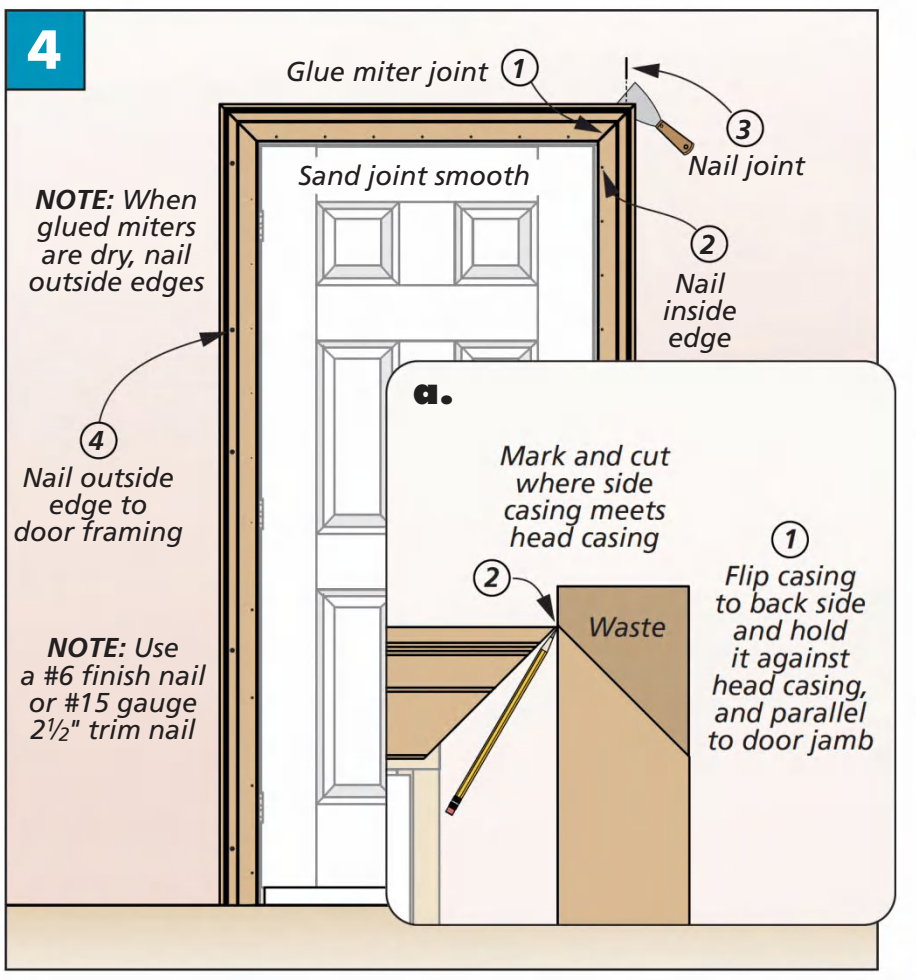

A Tidy Finish. Mark the miter location as shown in detail 'a.' After the cut, repeat step 3. Then, after the glue is dry, nail the outer edge of the casing around the door.

CASING A WINDOW

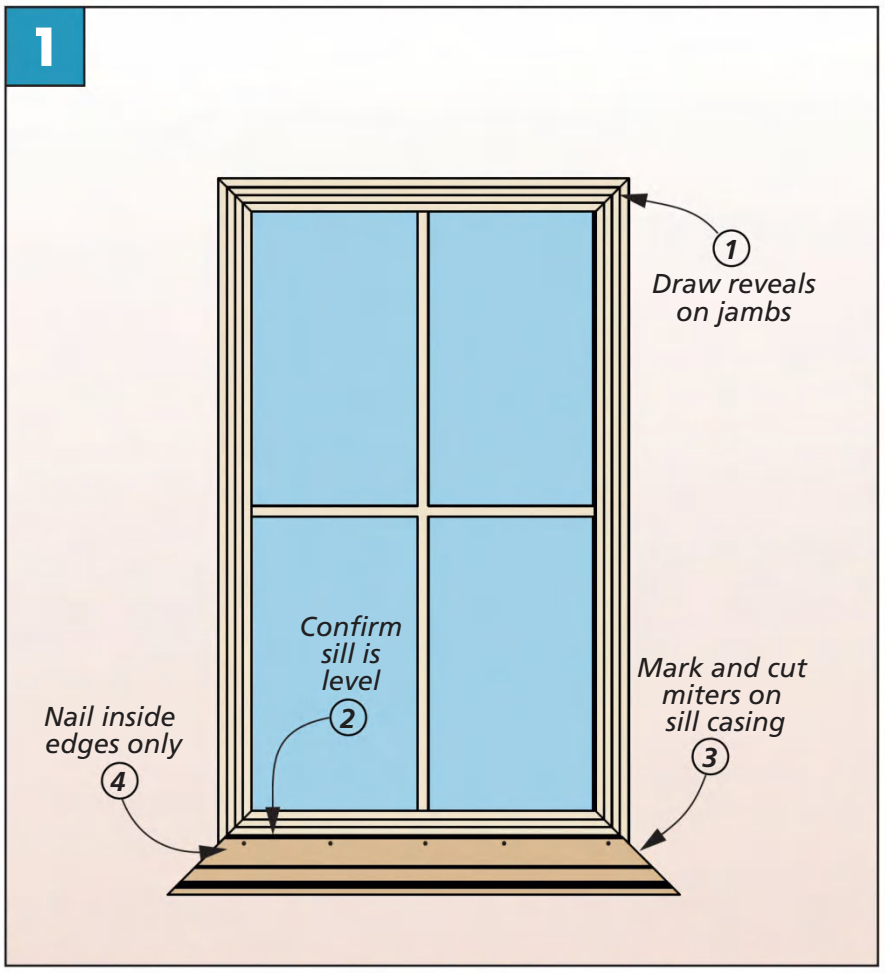

Bottom Casing First. After marking the reveal in all the corners of the window, measure, cut, and nail the bottom piece of casing. As with the door, nail the inside edge only.

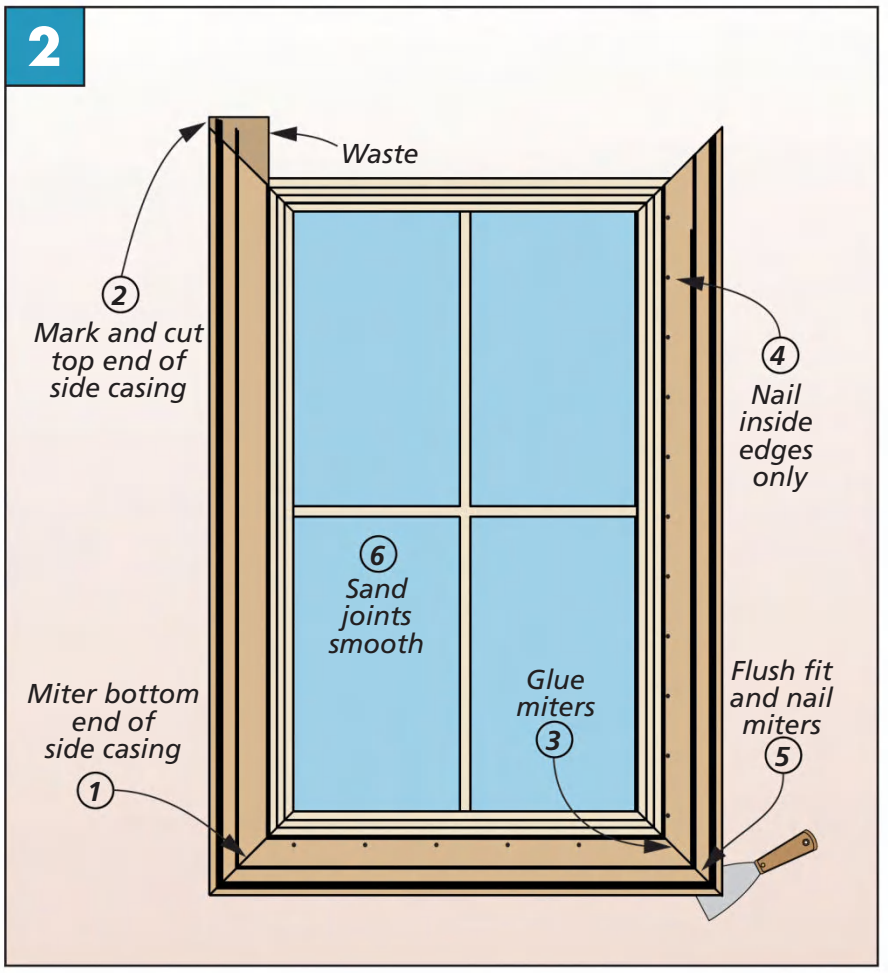

Then the Side Casing. Installing the side casing is a repeat of Figure 2 from casing the doors. Take the extra effort to ensure both side pieces are plumb.

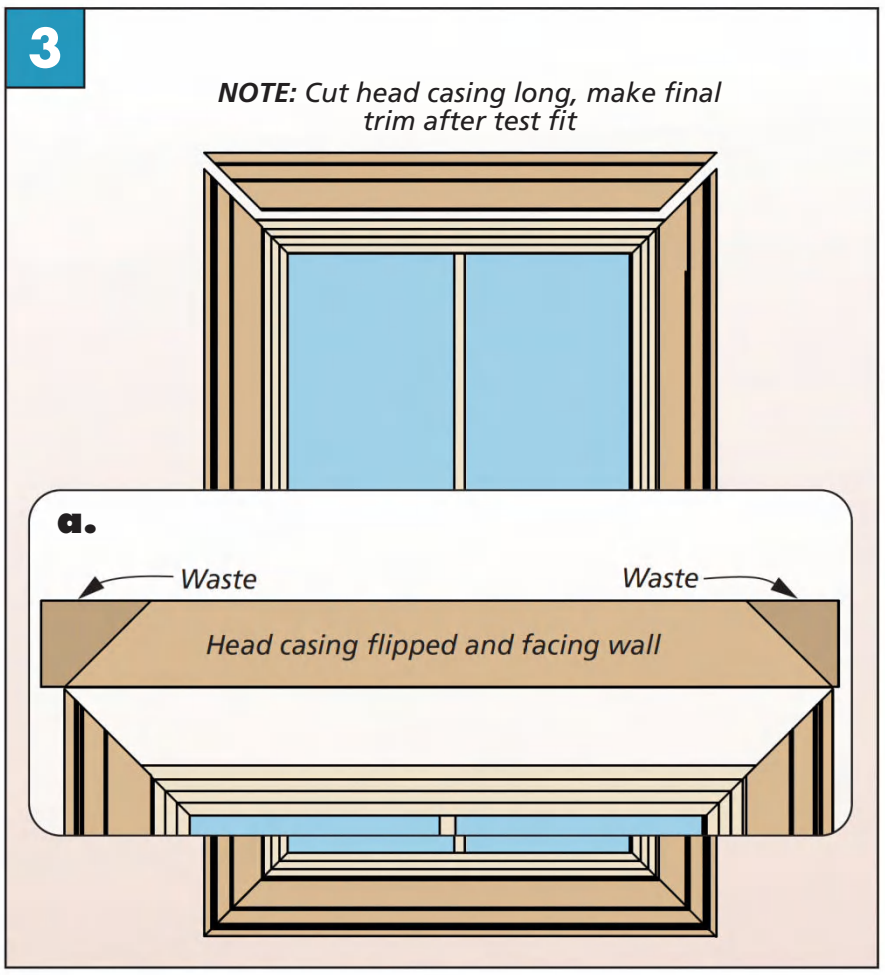

Finish with the Head. Fitting the head casing is the same process as Figure 3 on the door times two. Start by cutting the casing a little long, then sneak up on the final fit.

TRIMMING WINDOWS

There are a couple more steps to account for when it comes to casing windows. For starters, there's the bottom casing added into the mix. Unlike the door casing where the floor is the starting process, how you install the bottom casing dictates the rest of the installation. And the wall plane can present some vexing problems that we'll talk about shortly. For now, let's pretend that the window is perfectly flush in the wall plane. That means focusing on the beginning — the bottom casing.

A GOOD START. When you cased the door, it didn't matter if the floor was level. The foot of the side casing rested on the floor and the reveal mark you made at the level head absorbed any difference. With a window, you have to make sure the bottom casing is level. Not to worry though, throwing a short level on the sill will confirm what's most likely already true, the sill is level. Which means you can make and install the bottom casing as shown in Figure 1 above.

Since the window is a closed frame, four pieces of casing instead of three, Figures 2 and 3 here are a doubled-down version of Figures 2 and 3 of the door casing. This means that you want to focus on ensuring the side pieces in Figure 2 are plumb. Doing so will remove a lot of headaches when fitting the head casing in Figure 3.

ADJUSTING THE WALL PLANE

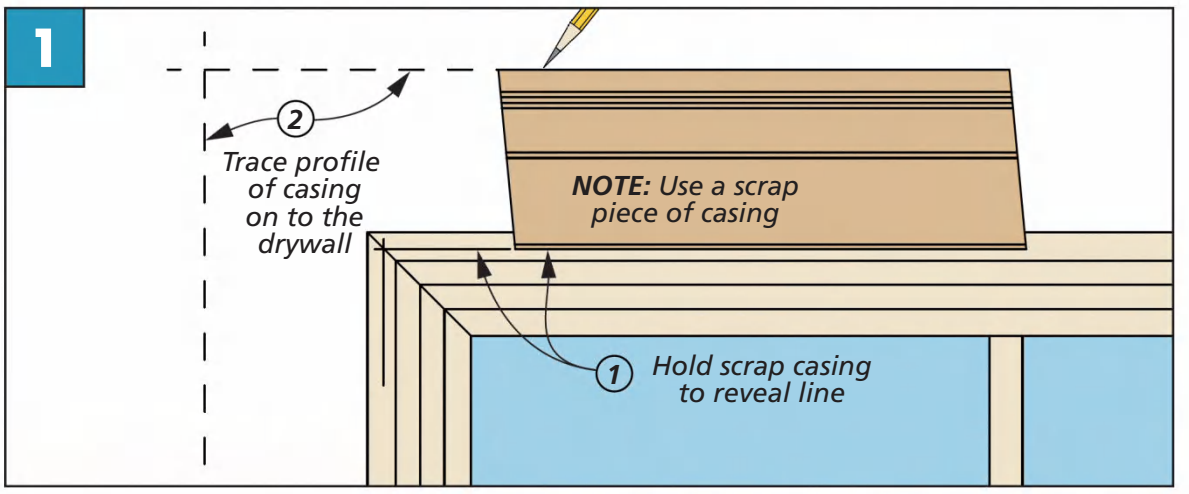

Trace Casing Profile. Hold a piece of casing in place on the window and lightly trace the outer profile. Remember to erase the line before installing the casing.

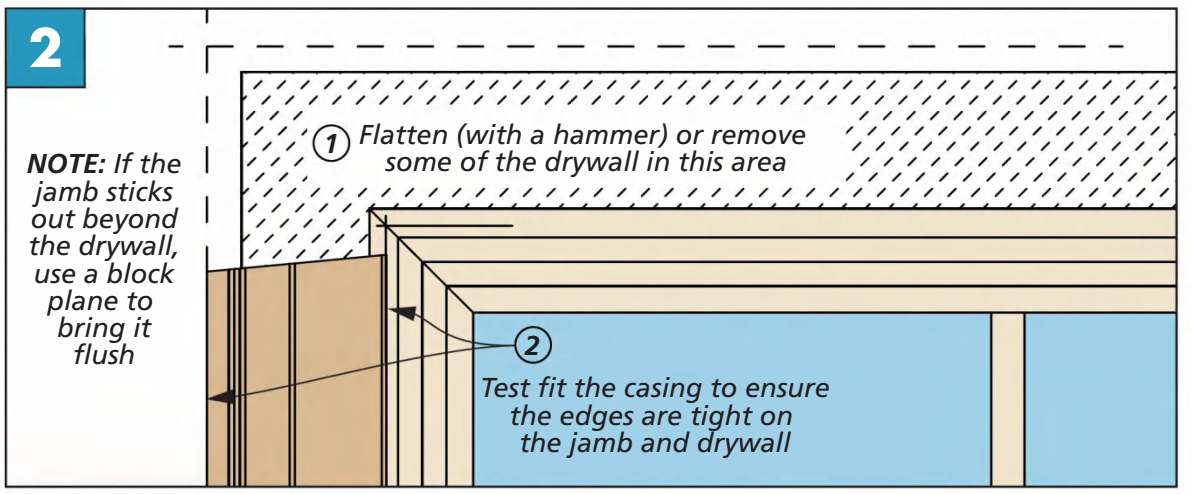

Remove or Crush. Remove enough of the drywall to allow the casing to sit tightly against the wall and the jamb. Often a little flattening is all that's needed.

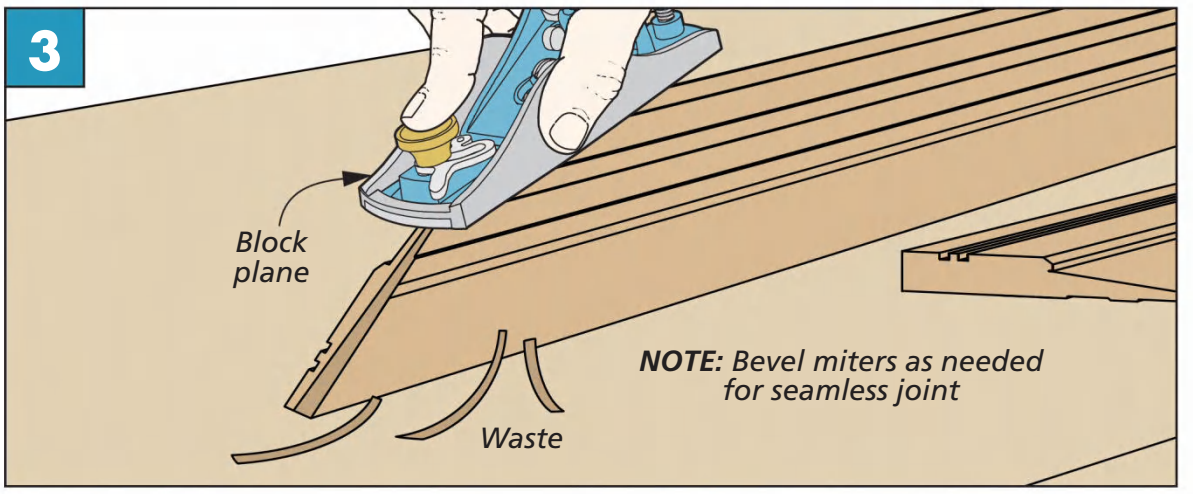

Fine-Tuning the Miter. You might need to bevel the edges of the miters so that the joint between the two pieces closes tightly when attached to the window.

THE WALL PLANE

So let's take a few minutes and talk about headaches. Not the ones that lurk between your ears, but the ones that can make the adventure of trimming windows less than fun.

On occasion a window will sit short of the wall plane. This means the casing will not close tightly against either the wall or the window jamb. To remedy this problem calls upon a little brute force. You know, some friendly persuasion that makes things fit.

I haven't covered all the challenges that you'll face when trimming doors and windows. But these tips and tricks will help you navigate most of the problems that will arise. W

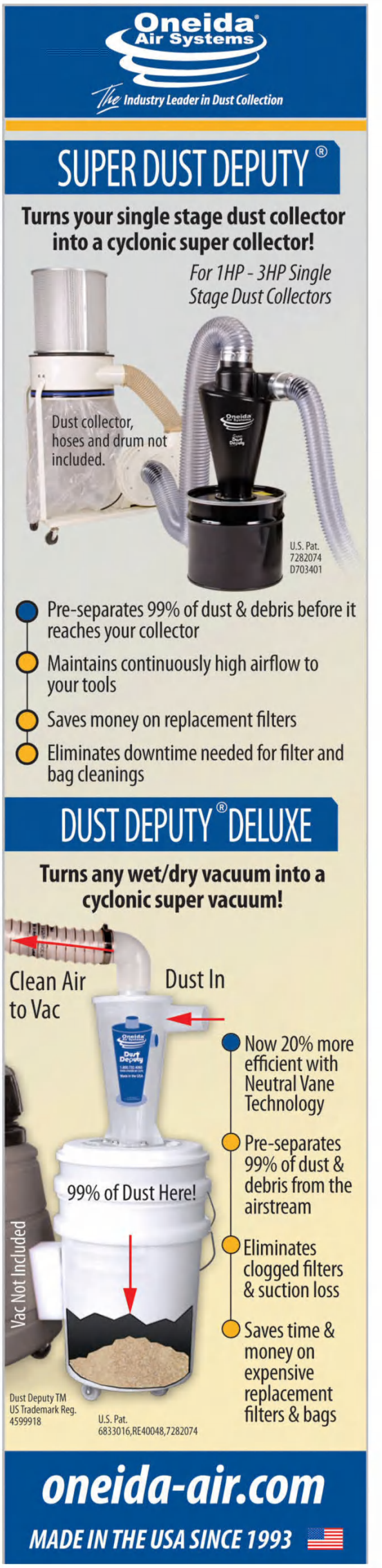

Chisel Tips & Techniques

It's tough to think of tools that get more use than my chisels. And while it's tempting to just pick up a chisel and start whacking, you can get better, more consistent results by using the right technique.

I've picked out five everyday shop tasks that give you a good overview of some basic chisel techniques. The principles apply to other chisel uses.

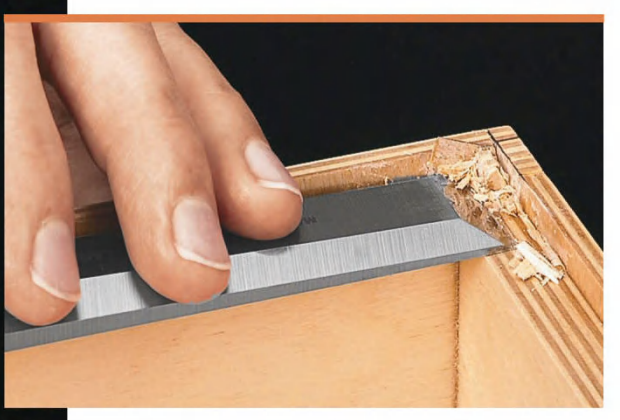

Lay out the corner with a pencil and a combination square (top photo). Define the corner with a vertical cut (left photo), then remove the waste with a paring cut (lower photo).

SQUARING A RABBET

I often use a router to create an opening for a cabinet back. But the router leaves rounded corners. With a chisel, you can square them up in a snap. This first technique provides a good starting point for mastering your chisels. The first step, though, is to define the corners with layout lines. In the left photo you can see what I'm talking about.

CHOPPING CUTS. Vertical, chopping cuts define the corner. Make your first cut across the grain of the wood to prevent a split. A wide chisel provides a bearing surface to keep the cuts in line with the rabbet's shoulder (main photo). I find holding the chisel on the blade offers greater control.

PARING CUTS. The second cut is horizontal, paring away the waste (lower left photo). My left hand steers the chisel and the right hand provides the power. The chisel is positioned bevel up. With the handle clear of the workpiece, the flat back keeps the rabbet even.

Written by: Phil Huber

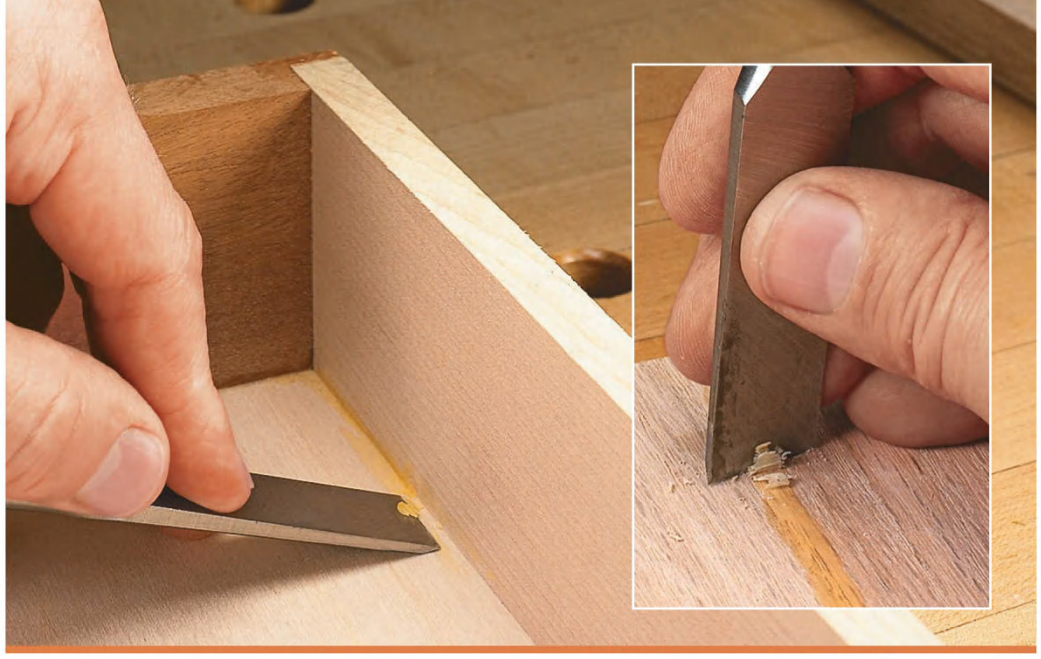

To remove glue from the corners of assembled drawers, hold the chisel bevel down. Along an edge joint, a vertical, scraping cut eliminates glue and protects the surface (inset photo).

GLUE SCRAPER

Removing dried glue squeeze-out is a common task, but it's no picnic. The photos above highlight two approaches.

When glue has dried in a corner, like the drawer you see above, I use a bevel-down grip to pop the glue out. The bevel acts as a safety to keep the edge from gouging the workpiece.

Squeeze-out on edge joints calls for a different approach. Here, you want to hold the chisel nearly vertical and pull it along the glue line (inset photo). It's a scraping action that shears off dried glue. This is one job you may want to assign to a specific chisel. It saves wear and tear on chisels with a keen edge.

The flat back of the chisel registers on the surface for a final paring cut to trim the edging flush.

TRIMMING PLUGS

Wood plugs and pins reinforce joints and conceal the heads of screws. The challenge is trimming them without damaging the surrounding surface.

The first thing to do is to cut off the plugs close to the surface with a hand saw. A chisel comes in batting cleanup.

END-GRAIN PLUGS. A section of dowel can be used to make an end grain plug for a screw hole. But it's difficult to make a smooth chisel cut across the dowel's end grain. To trim the plug flush, I start with scoring cuts around the perimeter (upper right photo). Then gradually increase the depth until the plug is nearly flush. A last bevel-up cut trims it smooth.

FACE-GRAIN PLUGS. Face-grain plugs are simpler. You want to avoid splitting off the plug below the surface. To prevent this, I take thin cuts across the grain, working down to the surface (inset photo). Finally, you can touch up the plug and surrounding wood with light sanding.

MARKING KNIFE

The sharp edge of a chisel also stands in as a versatile-shop knife. To use a chisel as a marking knife, hold the back against the square and tilt it up so the edge won't catch. You can use this same grip to cut veneer, cardboard, and leather.

To trim end-grain plugs, make cuts from all sides to avoid breaking off the fibers. On face-grain plugs, cross-grain paring cuts keep the wood from splitting.

Draw the chisel along the edge of a square to score a line in a workpiece. Use a light touch to avoid digging into the surface.

TRIM EDGING

Trimming edging flush to the end of a panel isn't much different than trimming an end-grain plug. Start by cutting the edging with a hand saw. Then with a horizontal cut, make thin passes to bring the edging flush. Avoid tearout by cutting from both edges toward the center. A final, light pass levels out the slight hump in the center. W

Refreshing your Router Bits

Cleaning solution, a brass brush, and a few diamond sharpeners are all you need to keep your router bits in good cutting shape.

It's not hard to feel the difference a sharp edge can make with a hand tool. When using a chisel or hand plane, you can tell when your edge stops biting and you have to start putting some extra muscle in. However, it gets harder to tell the difference when a motor is doing the work for you. You may not have the same physical feedback with a power tool, but a dull edge will make a difference all the same. I can't always feel when my router bits get worn, but when I see rough cuts I know my bit needs honing. With a little care and maintenance, you can get those worn bits cutting like new, adding years to the life of your best bits.

WHY HONE? Why bother honing your bits instead of throwing them out and buying new ones, or when some companies offer lifetime warranties, just sending them back to be replaced? Aside from saving yourself time (and money if you're buying new ones), the idea of honing is to keep your bits as good as possible for as long as possible. Either way, honing your router bits is most effective when you work on them consistently as you use them. If you clean and hone the bits you've been using regularly, you'll find you only need a couple passes to have a quality edge, which will limit the amount of material you're taking off of your bits in the long run, extending their lives.

CLEANING. To start, the bits need to be cleaned. Resin build-up is the first thing to look at when your bit stops cutting as well as it once did. Cutting any wood can result in resin sticking to the bit, especially if you're

Written by: Rob Petrie

After you've let the bit rest in cleaning solution, a brass brush should be able to take off any built-up resin. Remember to remove the bearings from the bit before cleaning. Some solutions can dissolve the lubricantion inside.

working with something like pine. The best way to get resin off is by coating the bit with cleaning solution, letting it sit for ten to fifteen minutes, then going at it with a brass wire brush, as shown in the photo above. You should be able to get off most of the gunk and grime this way. Some scorch marks may still remain, but don't worry too much about those. They won't affect the cutting edge or performance of the bit. Additionally, make sure to remove the bearings from your bits before cleaning (usually this just takes an Allen wrench) as some cleaning solutions can dissolve the lubricant in the bearings.

SHANK. Once the bit is clean, take a look at the shank of the bit. Any burrs or rust on the shank can interfere with how the collet grips the bit, which will affect your cuts as surely as a dull edge. Patches of rust can be taken off by steel wool, and a small file is a good tool to take down any burrs that have formed. This will make sure the shank is smooth and ready to be gripped by the collet.

BIT INSPECTION

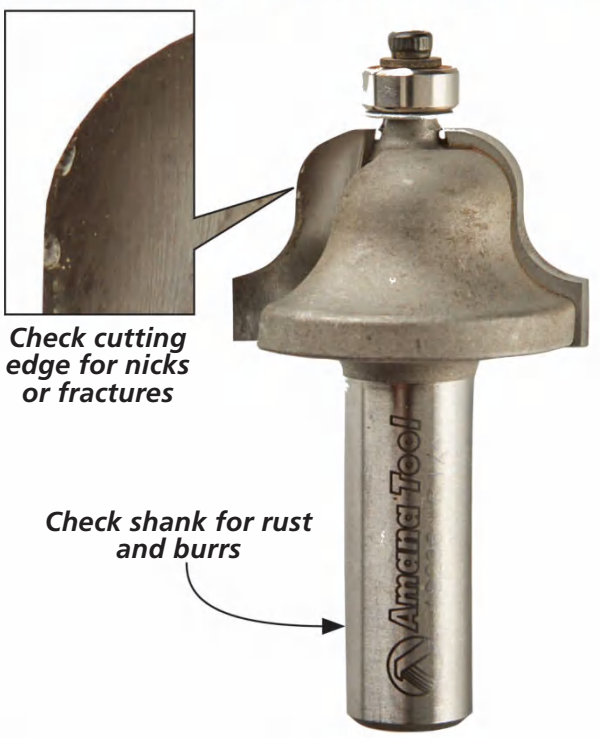

Bit Check. Before you get to honing, check the edge and shank of your bit. Find some good light and check for nicks or fractures on the edge and rust or burrs on the shank. The shanks can be cleaned up, but if there's damage to the edge, throw the bit out. Not all of them can be saved.

Cheaper than the box stores.
Better than the box stores.

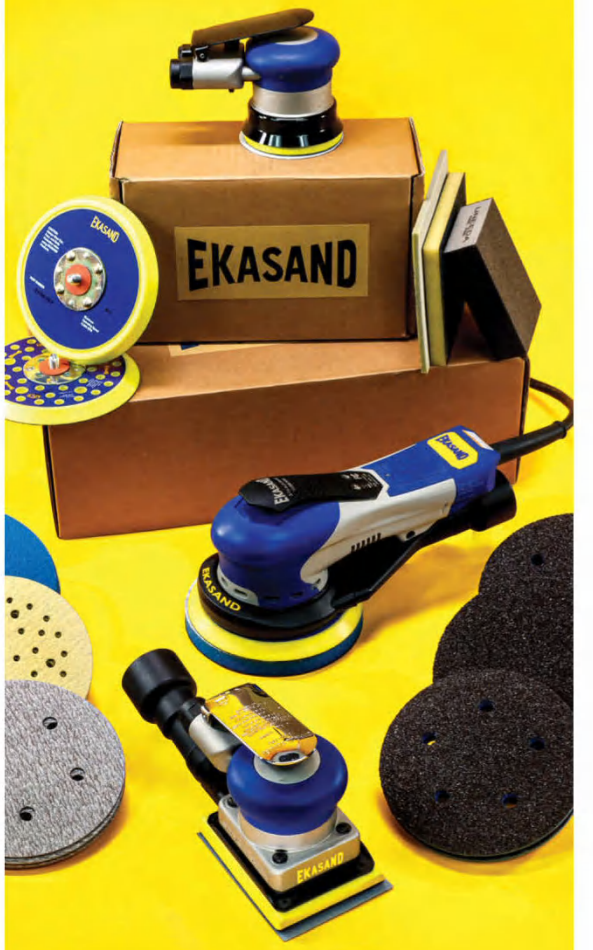

UNEEDA

Helping you achieve better sanding results. Every time.

www.uneeda.com

Illustrations: Bob Zimmerman

Diamond paddles, or pocket stones, are a good choice of sharpener for their versatility.

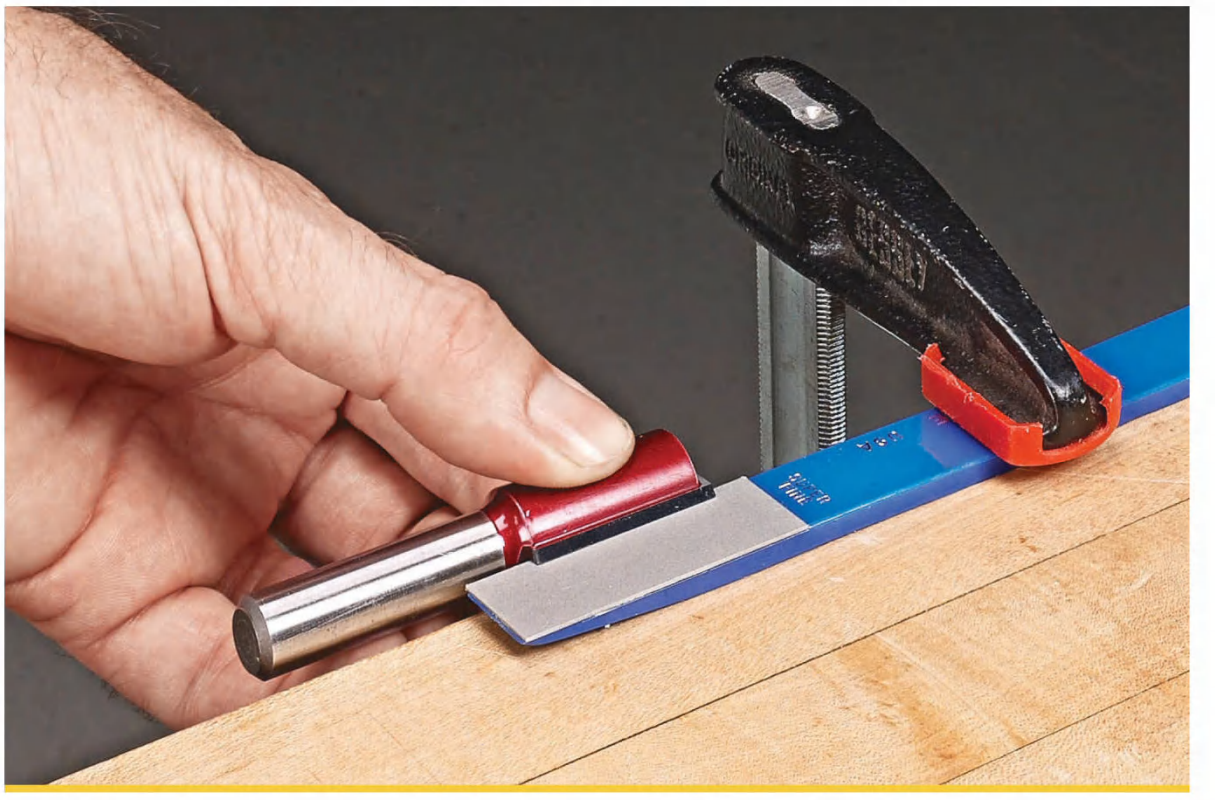

When honing, make a few passes on one flute, then make an equal number of passes on the other flute. This will keep all your cutting edges even, and ensure that you're not taking too much material off one of the flutes.

COMING TO THE EDGE

Now that the bit has been cleaned, take a look at the flutes. Find some decent lighting and hold the bit so you can see the cutting face glint in the light. Look for any imperfections there. Some may just be blunted areas along the edge, but if you see nicks or fractures, throw the bit out. Carbide is extremely hard, yet relatively brittle. Even a small fracture in the bit can be dangerous. A tough or knotty piece of wood could cause it to fracture entirely while you're cutting and send carbide fragments flying back at you.

Hold the bit firmly against the stone to prevent rocking and apply light pressure. For bearing-guided bits, remove the bearings beforehand.

SHARPENING STONES. Most router bits are tipped with or entirely made of tungsten carbide, a particularly hard yet brittle metal. When it comes to honing carbide, your regular sharpeners aren't going to cut it. You'll need to use a diamond sharpening stone, and stick to 600 grit. With the brittleness of carbide, a coarser grit could cause fracturing, while a finer one would create a very sharp but weak edge that will quickly dull again.

When it comes to picking which kind of sharpening stone to use, you've got a few options: diamond paddles, diamond bench stones, or diamond needle files. But how do you know which sharpener is right for the bit you're honing?

PADDLES. Diamond paddles (also called pocket stones) are a good starting point because they can offer some of the same benefits as the other two types of sharpeners. Their size allows them to hone narrow or oddly shaped flutes, but they can also be clamped to the bench for easier honing, as shown above.

BENCH STONE. My personal preference is a diamond bench stone. The length helps when honing larger bits, and I find the size and shape make it easier to keep the flutes flat against the stone. With a thick bench stone, you won't need to worry about it flexing as you hone, ensuring an even sharpness across the bit. You can find bench stones in similar sizes as oil or waterstones, or in a smaller credit card sized variety. Either will do, as long as the stone is thick enough to keep from flexing while you work.

FILES. I find that needle files are a good choice for bits with small flutes or angled cutting surfaces. Of the diamond sharpeners here, I also find these the most difficult to keep straight and steady. You may not be able to clamp the needle file to your bench, but maintaining a light grip will make sure the flute and file are even. Keep an eye on your honed edge while you're working with these for any unevenness. If you catch it early on, it's easy to correct.

HONING. Now that our sharpeners are chosen, it's time to hone. The good news is aside from the sharpeners, you only need good light, a comfy seat, and a few minutes. The only parts of a bit that need honing are the flat faces of each flute. Attempting to hone the outside would quickly change the profile and diameter of your bit.

You can hone a router bit just by holding the bit and sharpener in hand, but I find it easiest to clamp my sharpener to a bench first, as I would when honing a chisel. Lay the face of the flute flat against the stone or file and keep a light grip to make sure you're honing evenly as you move the bit back and forth across the sharpener. Apply only as much pressure as you need to keep the bit steady.

It's important to keep a uniform sharpness across the bit, so that it cuts even and smooth. Instead of honing one flute at a time, take five passes on one flute, then switch to the next flute. Use an easy motion, applying a steady amount of force throughout and on each flute. Most diamond sharpeners are made to be used dry, but a little lubricant can go a long way in keeping your sharpeners clean and preventing clogging. Mineral oil is a good choice, but water will work as well. Just be sure to dry your bit off afterward to prevent rusting.

A good trick to check your honing technique is to mark the cutting face of the bit with a permanent marker. Take a look after a few passes. Are there any areas you missed? It's easy to correct your technique if you catch it early on in the process.

A needle file is most useful for bits with particularly small or curved flutes. The needle file may be too small to clamp to your bench, but you can still get an even hone by keeping the file flat on the flute and applying light, even pressure.

A diamond bench stone is a good choice for larger bits. The length and width make it easy to keep the stone flat even without clamps, and to keep the broad flute face of larger bits even while making passes.

How do you know when a bit is fully honed? It may take less time than you think. As shown in the pictures below, a honed cutting face has a cleaner and more uniform look.

While some of your more worn bits may need extra attention, honing a router bit should only take a few minutes. Once you've invested in the right tools, getting in the habit of regularly cleaning and honing your bits will certainly be worth the time and cost of having to replace them prematurely. I find it's worth the effort alone just to make sure my routing is clean and smooth.

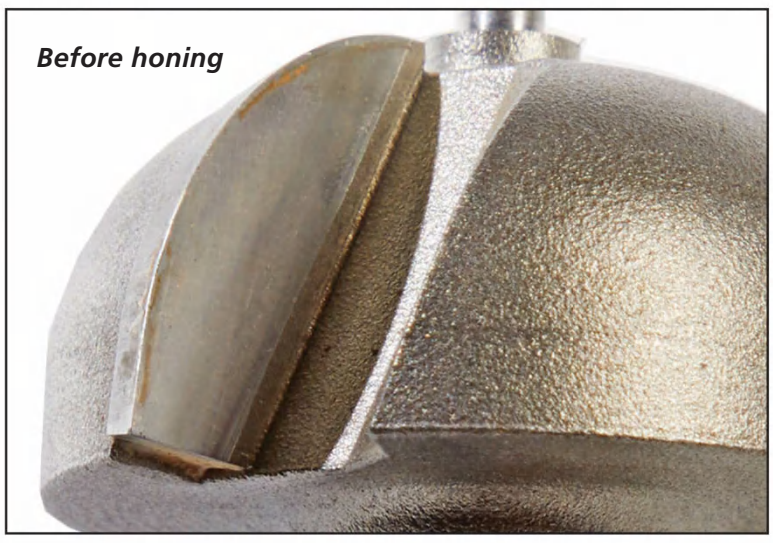

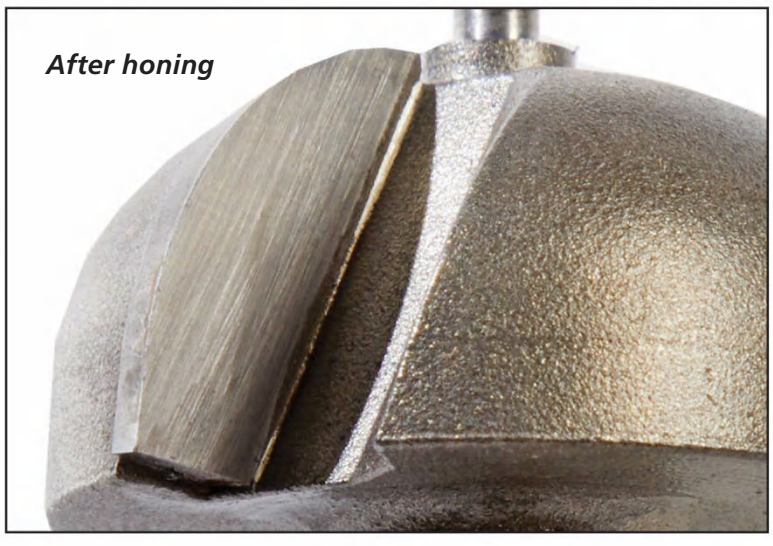

Your senses are the best tools for telling when you're done honing a bit. A finely honed cutting face will look clean and feel sharp on the edge.

As one last note on honing, it may seem obvious, but it's important to remember that you're removing material from your bits. While the amount removed is relatively small, a bit can only be sharpened so much in its life. It's best to err on the side of taking too little rather than too much. Once your bits are sharp, they'll only need a few passes as regular maintainance to stay sharp. Regular honing will minimize the amount of material removed overall and maximize the life of your router bits.

BEARINGS. With the bits honed, you're ready to reinstall any bearings you may have removed. Before you do though, feel how the bearing moves. Does it feel slow, as if there's some resistance? Like most things, the lubrication will break down with use, and gunk may be clinging to the outside of the bearing. A toothbrush and a precision oiler are all you need to get the bearing moving freely again. After cleaning off the bearing with the toothbrush, use the needle tip of the oiler (shown in the photo on the next page) to add some lubricant directly to the bearing.

CARING FOR THE COLLET

Working with a sharp router bit is a must, but your bit won't work well if it's not held securely. That leaves us one last part to look at, one of the most overlooked parts of the router — the collet.

KEEP IT CLEAN. Similar to a bit, the first thing to check on the collet is if it's clean. Because of its position, wood chips, sawdust, and possibly even resin can become lodged inside. When this happens, the collet can't grab the shank fully.

To clean the collet, you'll first need to loosen the collet nut and remove it from the arbor. Using a brass wire brush, clean the inside and outside of the collet, as well as the end of the arbor.

The next step is to check the inside of the collet as we did with the shank of the bit, looking for any burrs or abrasions. Again, anything that comes between the collet and the shank can interfere with the grip between the two. Burrs are easy to remove with a

small half-round file, as you can see in the photo below. Once everything looks and feels clean, reassemble the collet and nut.

To make sure the arbor threads and the nut turn smoothly, I like to add a small amount of white lithium grease to the threads (as shown below). Make sure the grease is only applied to the threads, not to the inside of the collet. Lubricating inside the collet won't let it grip the shank.

As a final word for the collet, remember that it needs to grip the bit as securely as possible, which means holding on to as much of the shank as possible. However, inserting the shank up to the curve by the body of the bit will cause the collet to grip the curve instead of the entire shank. For the best grip, insert the bit fully, then pull it out about 1/16" before tightening the nut.

REPLACING PIECES. While we'd like to make all our old pieces work, sometimes you have to be realistic. If you've cleaned and lubricated a bearing that still doesn't seem to move right, then it may be time for a replacement. Using calipers, measure the inner diameter, outer diameter, and thickness of the bearing to find the size your replacement will need to be (see the photo above). Page 66 has my source for bearings.

Like brakes on a car, the collet too will wear over time. If you've cleaned up your collet like we did here and still find that your bit slips, that's usually a sign that it's time to get a new collet. You can find my source for new collets on page 66 as well.

And, if you can't seem to get a bit sharp no matter how much honing you do, then it's time to get rid of it. When you do get that new bit though, remember a little care can go a long way. W

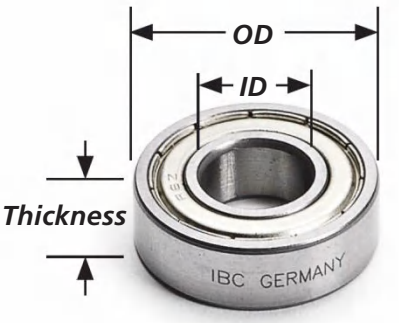

While most router bits are advertised as being sealed, you can add more lubricant with a precision oiler. The lubricant is delivered directly to the bearing with a needle-tipped applicator to get it running smooth again.

COLLETS NEED ATTENTION, TOO!

Shank Hole. To remove debris from the the collet, gently run a brass wire brush through the shank hole.

Burrs. A small, half-round file can be used to knock down any burrs that have formed inside the collet.

Lubrication. A coating of grease on the arbor threads will make it easy to change out your router bits.

Written by: Phil Huber; Project Design: Chris Fitch

Backpack & Satchel

A fun combination of functional design and lightweight construction, these carry-alls let you take your woodworking anywhere.

▲ In a nod to life essentials, both the backpack and the satchel (refer to page 30) are sized to fit laptops or tablets. Of course, there's still plenty of space for old-school books and magazines as well.

▲ You'll make a style statement for sure, but the backpack is surprisingly comfortable in use. Easily adjustable straps let you tailor the fit for biking or a stroll around town.

Like me, you may think that a wood backpack is an odd choice for a project — at first. Clunky, heavy, uncomfortable. But an examination of the details of this backpack (and the companion satchel) reveal a clever exploration of the wonder of woodworking design and thoughtful construction.

There was a time when a lot of the functional objects that surround us were made from wood, from utensils to furniture to shipping crates. The backpack and satchel call to mind the travel trunks, valises, and campaign furniture of the 19th century. But this isn't a strict steamship reproduction. Those pieces have an over-the-top grandeur. The look here is updated — clean, crisp, and better suited for bikes and cars.

The shared DNA is that the construction has to be both light and rugged. For the material, we used straight grained walnut. It's a mid-weight hardwood that is plenty strong. The pieces are assembled with box joints. This adds a graphic visual element to go along with large glue surfaces.

In keeping with the pared-down look, the hinge hardware for the lid is minimal. Purchased shoulder straps and stretch cord can be added to suit your style. With just a little work, you'll soon be ready to head out with a unique piece that's sure to draw attention.

Illustrations: Dirk Ver Steeg

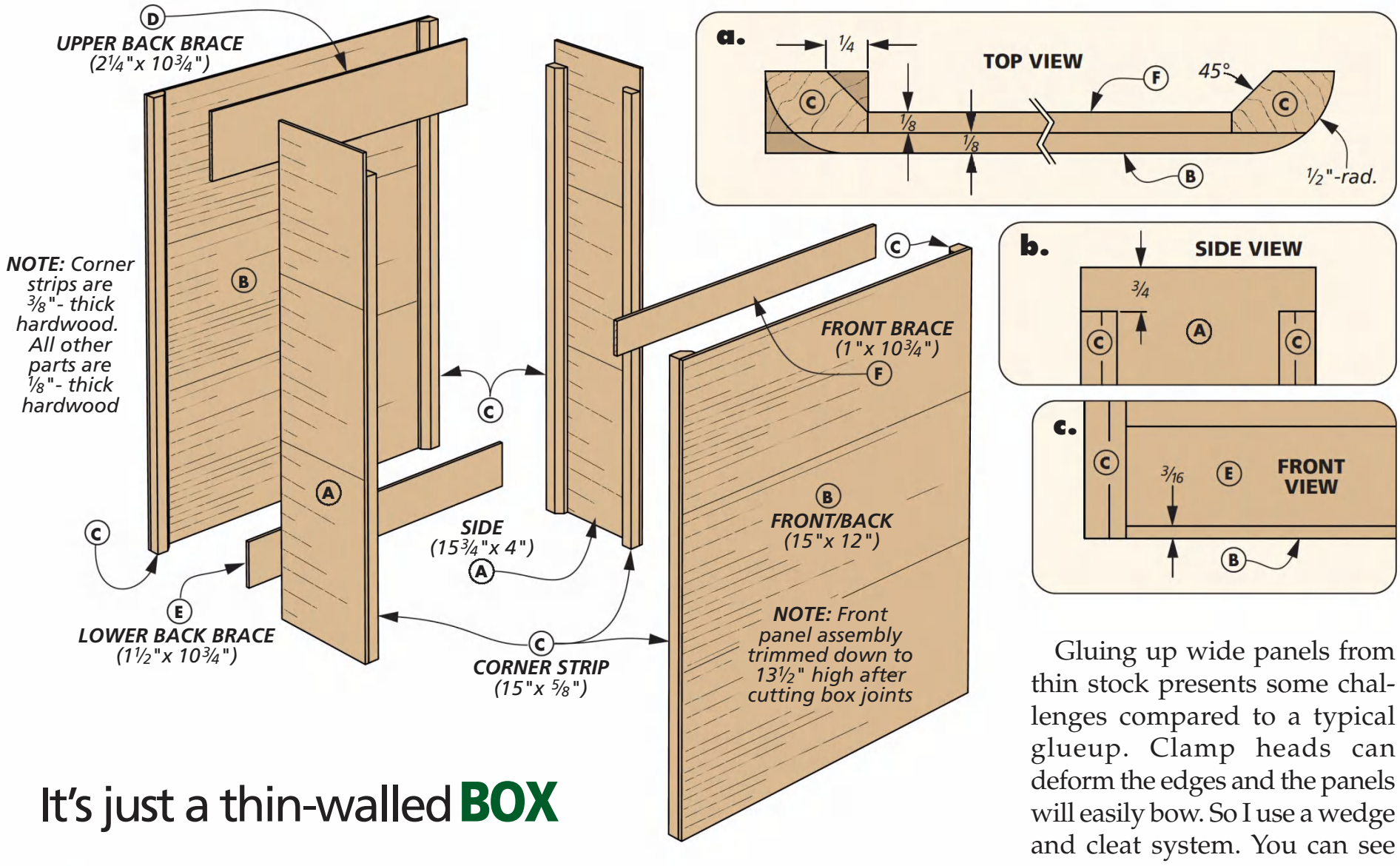

It's just a thin-walled **BOX**

While I'm going to focus on making the backpack, the process and techniques apply to the satchel, too. You can find the dimensions for that project starting on page 30.

To keep the weight down, you'll start by creating ⅛"-thick panels for the sides, front, and back. Like I said, we chose walnut for this version. Medium hardwoods strike the right balance of weight and flexibility. Think cherry, birch, mahogany. Straight grain patterns have a quiet look and allow the box joints to shine.

THIN STOCK FROM THICK BOARDS. I used a band saw to resaw pieces from thick planks. It's a good idea to cut the parts slightly thicker than you need. A thickness planer (or sander) removes the blade marks and brings the pieces to final thickness.

Gluing up wide panels from thin stock presents some challenges compared to a typical glueup. Clamp heads can deform the edges and the panels will easily bow. So I use a wedge and cleat system. You can see how this works in the article at *Woodsmith.com/257*.

REINFORCED BOX JOINTS. Thin parts keep the weight down but don't offer much glue surface for strong corner connections. The answer is to beef up the corners with corner strips. You can see this in the drawing above and in Figure 1 below. This creates a got-it-where-it-counts approach without adding much weight.

GO 2 Online Extras

For an article on gluing thin panels, go to:

Woodsmith.com/257

STRONG BOX JOINTS IN THIN BOARDS

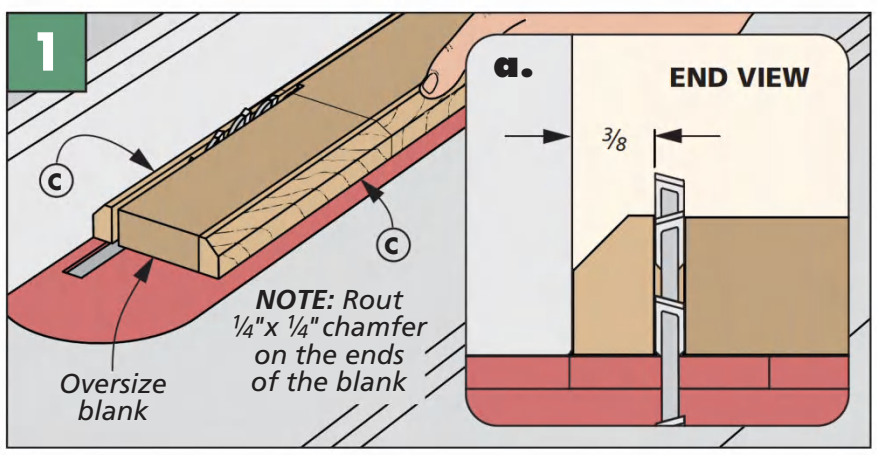

Chamfer then Rip. Rout a chamfer on both edges of an extra-wide blank at the router table. Then rip the strips to final width at the table saw.

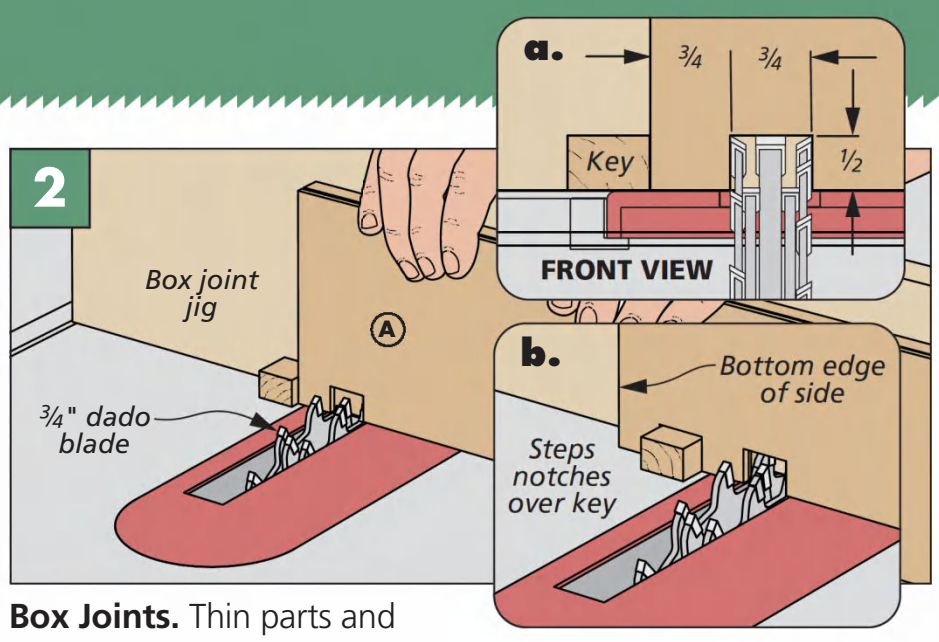

Box Joints. Thin parts and chamfered corner strips means you need to concentrate to ensure the parts are vertical and supported while cutting.

The thing to keep in mind here is making sure the grain direction on the corner strips matches the panels. This helps the box joints look their best.

Cutting the box joints is shown in Figures 2 and 3. A simple table saw jig and a dado blade is the technique I used. A key on the jig sets the joint spacing.

Just be aware that for half the cuts, the corner strips will lie between the panel and the jig. So go easy to avoid chipout.

Once the joints are cut, you'll need to add thin strips to the inside faces of the front and back (detail 'b' on the previous page). These braces strengthen the rim of the backpack.

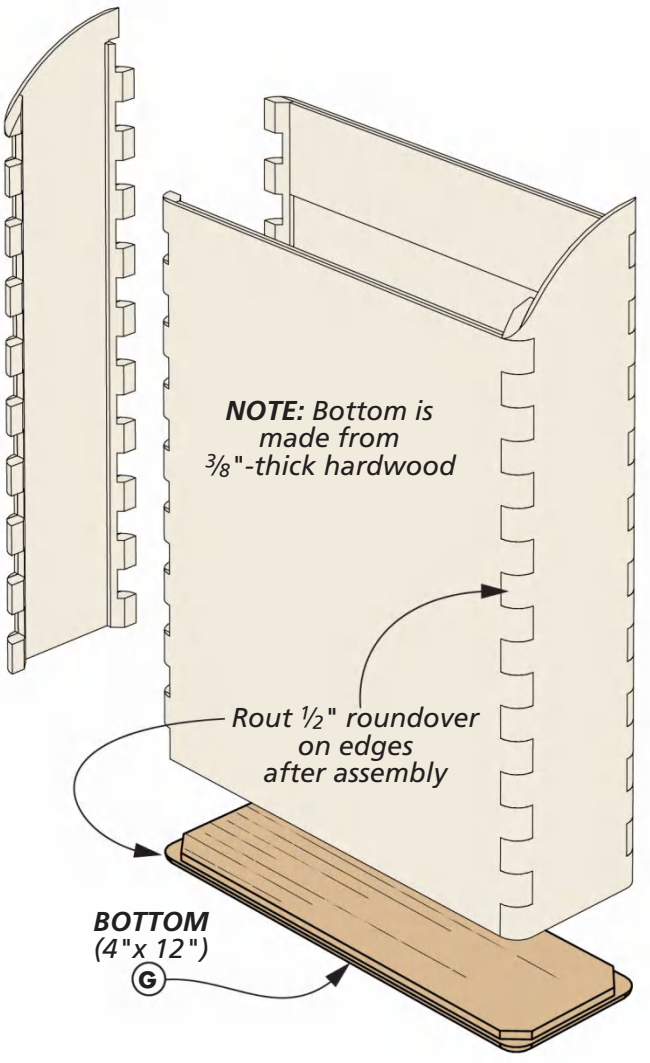

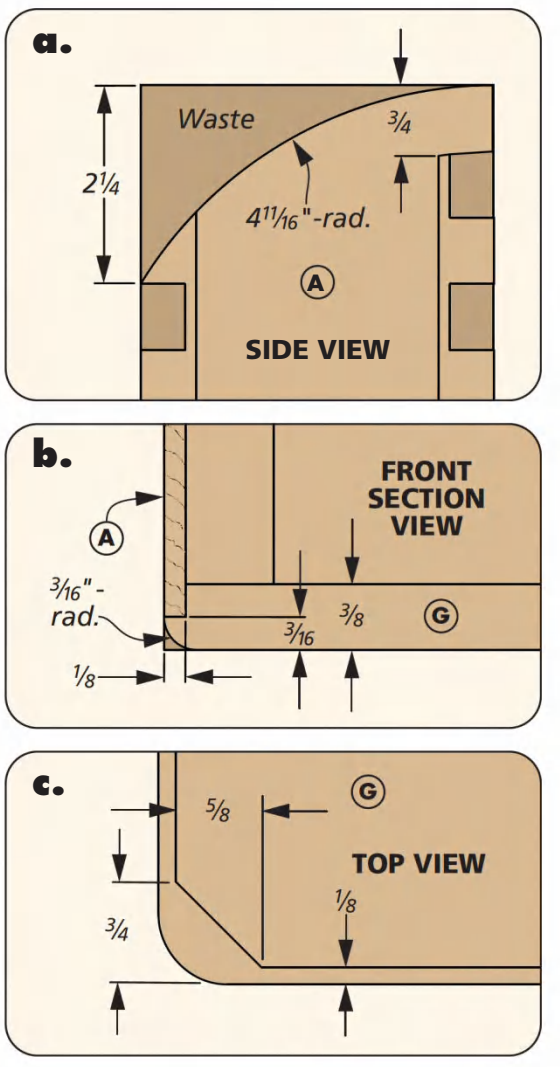

ASSEMBLY & ROUNDING

It's time to come together. Cut the curved profile at the top of the sides, as shown in detail 'a' at right. Then grab your glue bottle and band clamps.

Keep three items in mind as you assemble: don't use too much glue. Cleaning up squeezeout is no fun here.

Second, go easy on clamp pressure. Just enough to close the joints without bowing the panels. Finally, double check that the backpack is square before walking away for the night.

Once the clamps come off, clean up the glue remnants and smooth the joints. Then step to the router table to round the edges of the backpack.

ADD THE BOTTOM. The bottom wraps up the main work on the backpack's case, as shown in the drawing above. Cut the bottom to match the length and width of the assembled case. Then cut a rabbet around the edges so it nestles inside, as shown in Figure 4 and in detail 'b' above.

You'll notice it won't fit at this point. The corners need to be notched to accept the reinforcing strips, as you see in detail 'c' and Figure 4 below.

After gluing the bottom in place, trim the bottom to match the case with a flush-trim bit. Then ease the lower edge of the bottom with a sanding block.

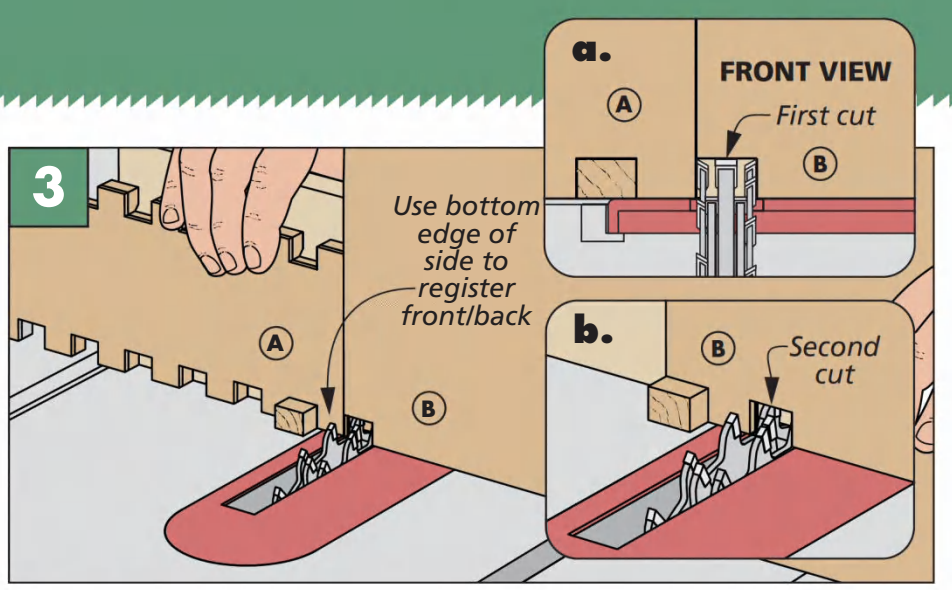

Start with a Notch. For mating parts, use a side piece as a setup gauge to start with a notch on the front and back (detail 'a'). Remove the side to continue stepping along the piece.

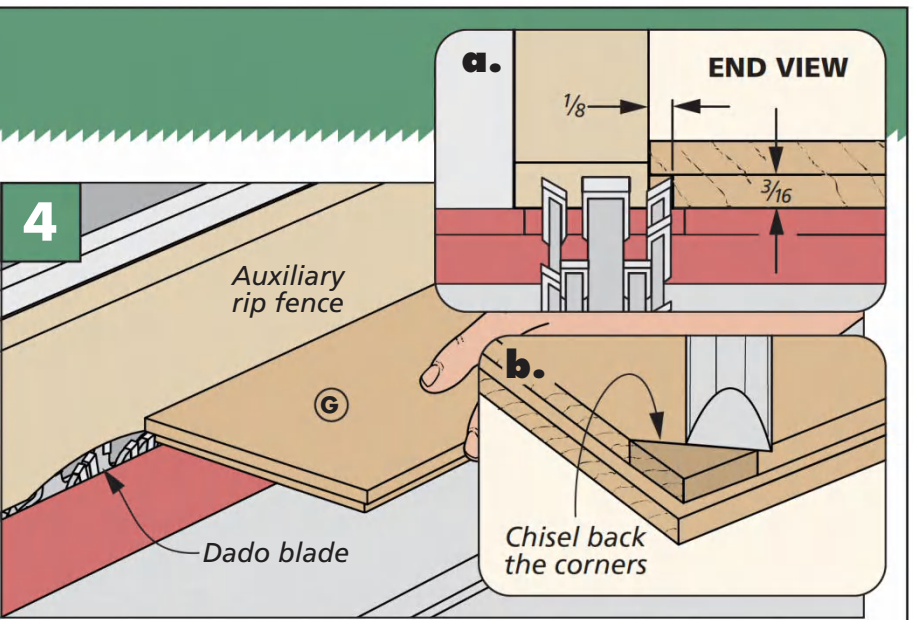

Bottom Rabbet. Recess a dado blade in an auxiliary fence on the table saw to size a rabbet on the bottom. Then use a chisel to clip the corners (detail 'b').

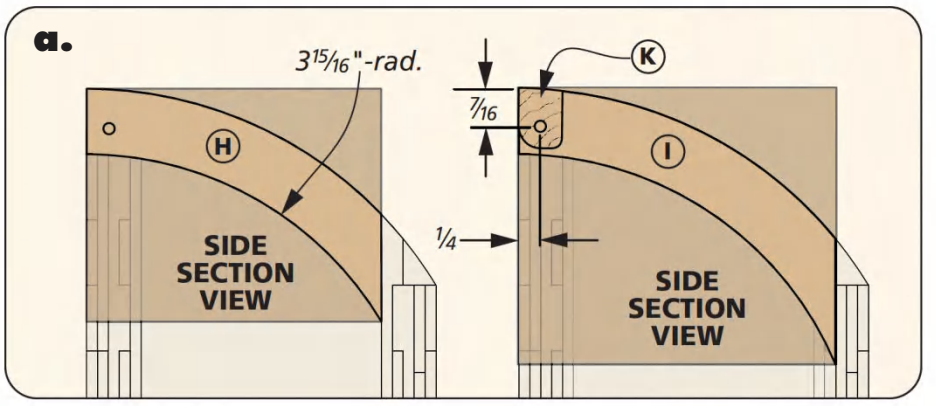

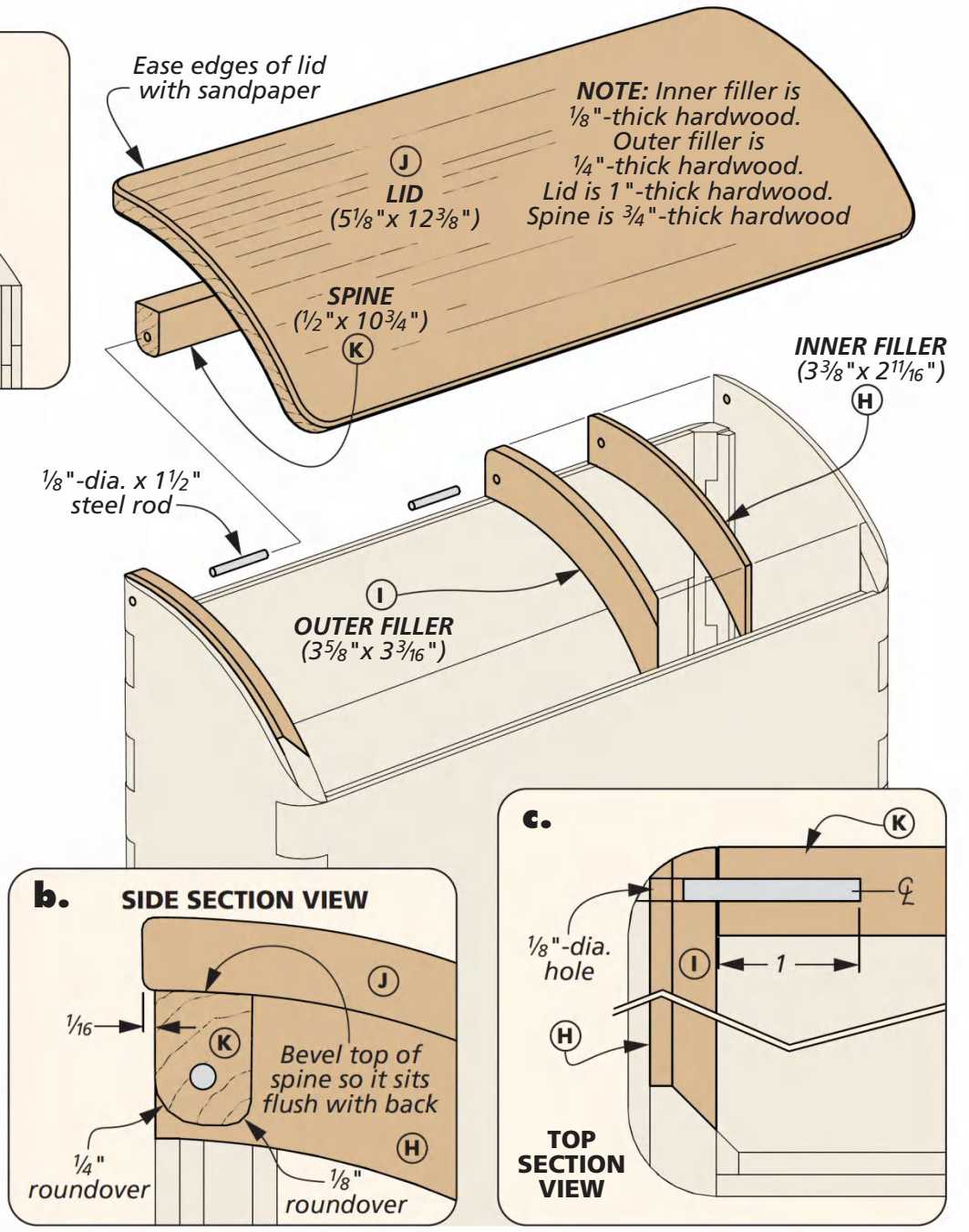

A curved **LID**

The top of the backpack is enclosed with a hinged, curved lid. The simplicity of the appearance of the parts shown in the right drawing understates the design considerations.

CASE CLOSED. We'll start by examining the lid-related elements inside the case. In order to provide a solid anchor for a hinge pin, you need to add some mass to the upper sides.

This is accomplished in two layers, as shown in details 'a' and 'c.' A thin inner piece and a thicker outer piece. Both pieces are curved to match the profile of the sides. The outer part is angled on one end to wrap around the reinforcing strip in the corner joint (detail 'c'). Shape the back end of the parts to conform to the curve of the backpack's corners.

To wrap things up, there's a hole drilled though the ends to accept a hinge pin. This is shown in details 'a' and 'c.' It's important that these two holes are in line with each other. If possible, do this at the drill press with a fence. Otherwise, you'll need to take extra care in laying out and drilling the holes with a cordless hand drill.

CURVED LID. The lid itself is the focus of your attention next. It's a two-piece assembly that consists of the lid and a spine.

The lid is curved on the underside to match the profile of the sides. The upper curve echoes the profile to complete the look. Use the case to trace the sides onto a blank for the top. Draw a parallel curve to define the upper curve.

I tilted the table saw blade and held the workpiece on edge to bevel off as much of the waste as possible. Figure 1 at left shows how to hollow the underside of the lid with a dado blade.

On both faces, the remaining shaping is done by hand. I find a block plane works well to

CURVED ROOF

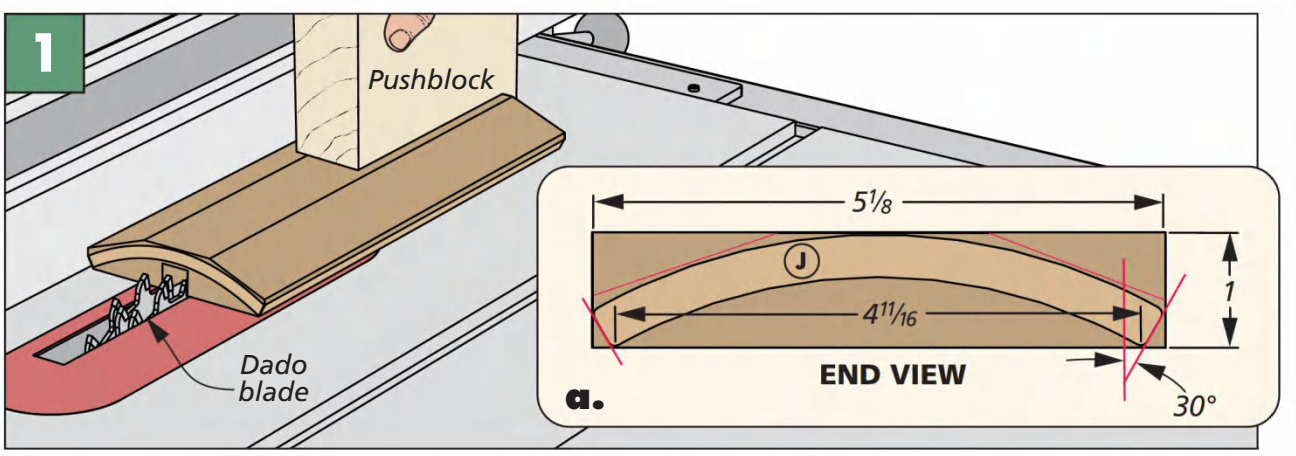

Hollow the Lid. Use a dado blade to rough out the underside of the lid. Adjust the blade height and rip fence position to make overlapping cuts getting as close to the layout lines as possible. A little scraping and sanding completes the job.

shape outside curves quickly. On the bottom face, a round plane would be equally effective. However, not many woodworkers have this plane. So I suggest a curved edge scraper and rounded sanding blocks to smooth this face.

SPINE. The other part of the lid is the spine. It's cut to size, rounded on the lower edge and glued to the lid. Set the lid in place and use the holes in the side to drill the rod holes in the spine.

STRAPS & CORDS

A pair of shoulder straps and some elastic cord transform a box into a pack. To do this you'll need to make and glue a pair of thin cleats on the front face, as in the upper right drawing.

CORD. A single length of cord zigzags through the holes in the cleats. Keep a little tension on the cord as you tie it off to give it a snug grip on whatever you stash within the web.

SHOULDER STRAPS. The lower drawing shows how and where the shoulder straps get attached. Two-part Chicago bolts anchor the straps. Use an awl or a punch to create holes in the straps — a drill bit won't work.

That's it. Load up your pack with a sketchbook and head out to muse over your next project. W

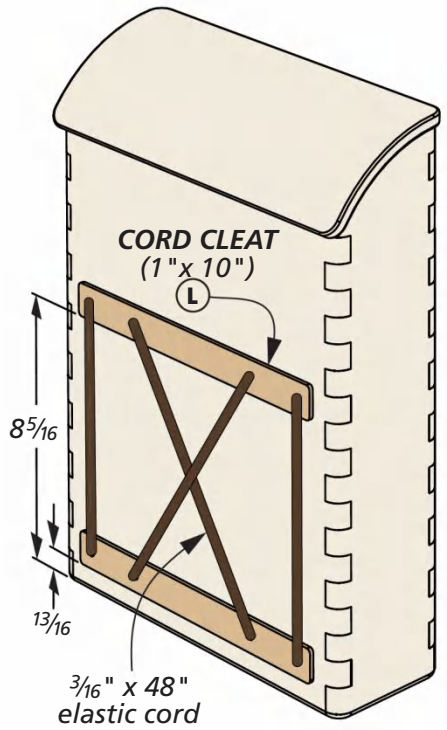

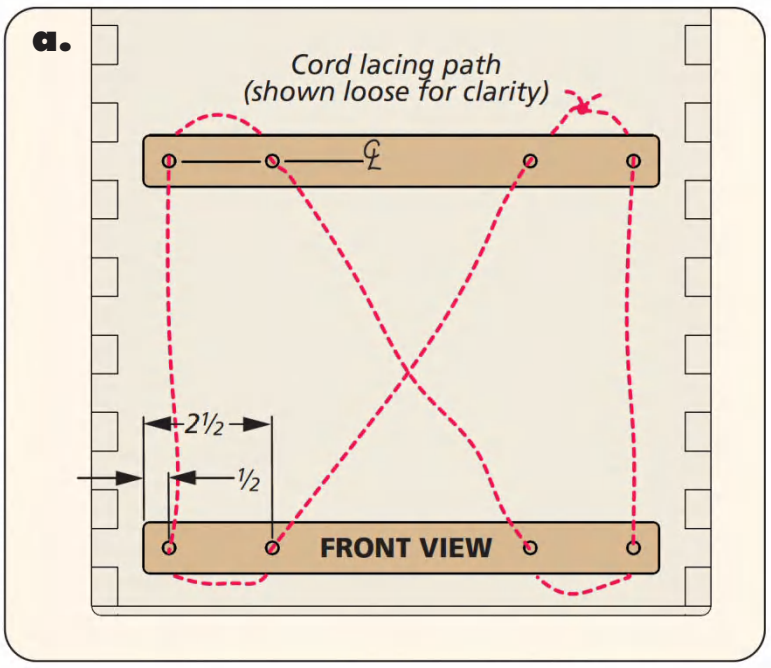

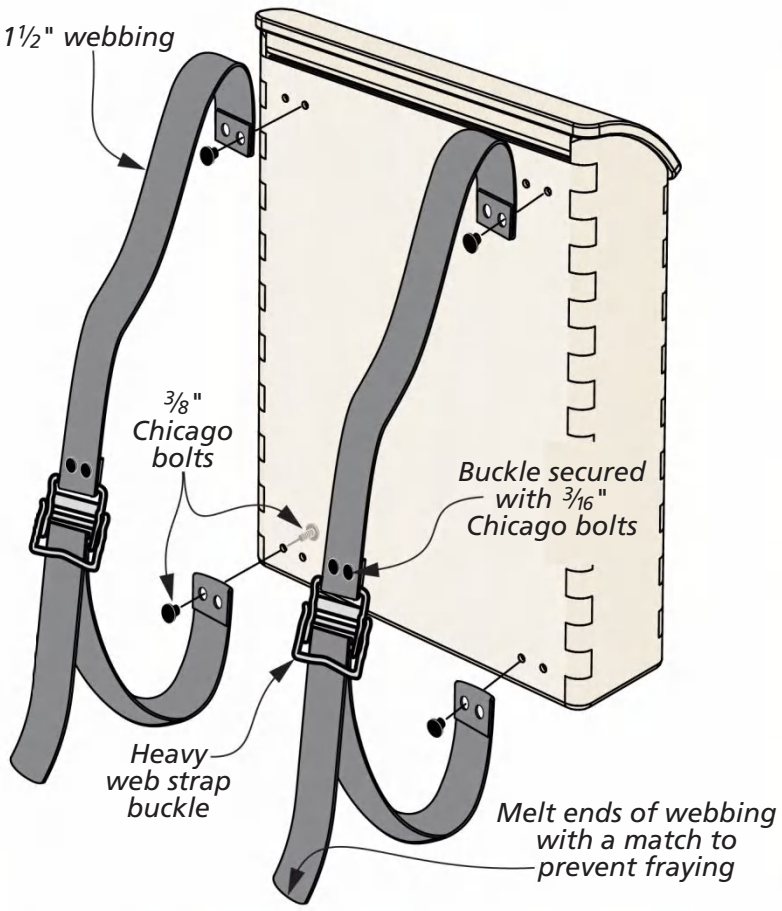

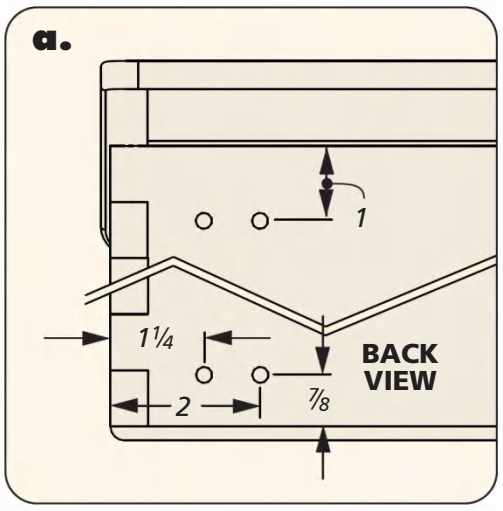

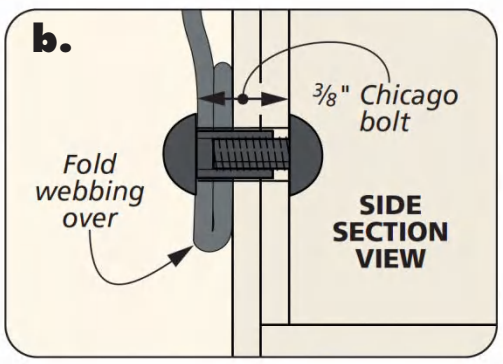

Materials, Supplies & Cutting Diagram

A	Sides (2)	1/8 x 15 3/4 - 4	**G**	Bottom (1)	3/8 x 4 - 12	•	(2) 1/8"-dia. x 1 1/2" Steel Rods
B	Front & Back (2)	1/8 x 15 - 12	**H**	Inner Fillers (2)	1/8 x 3 3/8 - 2 11/16	•	(1) 3/16"-dia. x 48" Elastic Cord
C	Corner Strips (8)	3/8 x 15 - 5/8	**I**	Outer Fillers (2)	1/4 x 3 5/8 - 3 3/16	•	(4) 3/16" Chicago Bolts
D	Upper Back Brace (1)	1/8 x 2 1/4 - 10 3/4	**J**	Lid (1)	1 x 5 1/8 - 12 3/8	•	(8) 3/8" Chicago Bolts
E	Lower Back Brace (1)	1/8 x 1 1/2 - 10 3/4	**K**	Spine (1)	3/4 x 1/2 - 10 3/4	•	(1) 1 1/2" x 72" Polypropylene Webbing
F	Front Brace (1)	1/8 x 1 - 10 3/4	**L**	Cord Cleats (2)	1/8 x 1 - 10	•	(2) 2" Heavy Strap Buckles

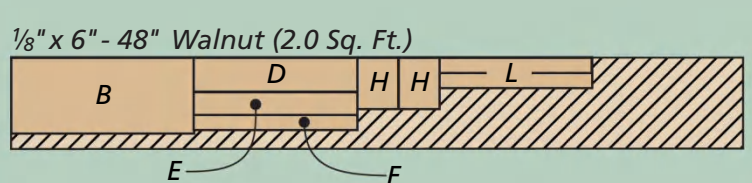

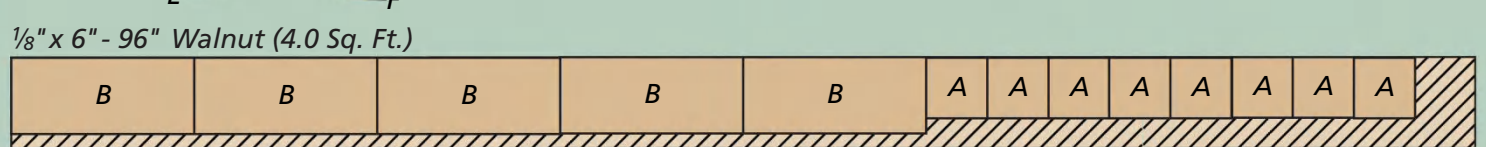

Over-the-shoulder **SATCHEL**

I get it. Not everyone is the backpack sort. Messenger bags or shoulder satchels like this one suit some folk better. You can make a shoulder bag from wood that's strong, lightweight, and attractive.

THIN PANELS, LIGHT CASE. The wood case is made from four ⅛"-thick hardwood panels connected with box joints. Resawing, planing, and gluing up thin panels likely accounts for the most time in making this project.

The front panel is the most visible part of this piece. So I set aside the best looking pieces when arranging the panels prior to glueup.

While the front and back of the satchel end up different widths (drawings below), I kept them the same size for some initial steps. The mating edges of each panel are beefed up with end-grain strips. The strips are chamfered to minimize added weight. The chamfers also eliminate a sharp corner on the inside of the case.

BOX JOINTS. Once the strips are glued on, you can cut the box joints on the sides, front, and back. The tool and jig you use doesn't matter so much as

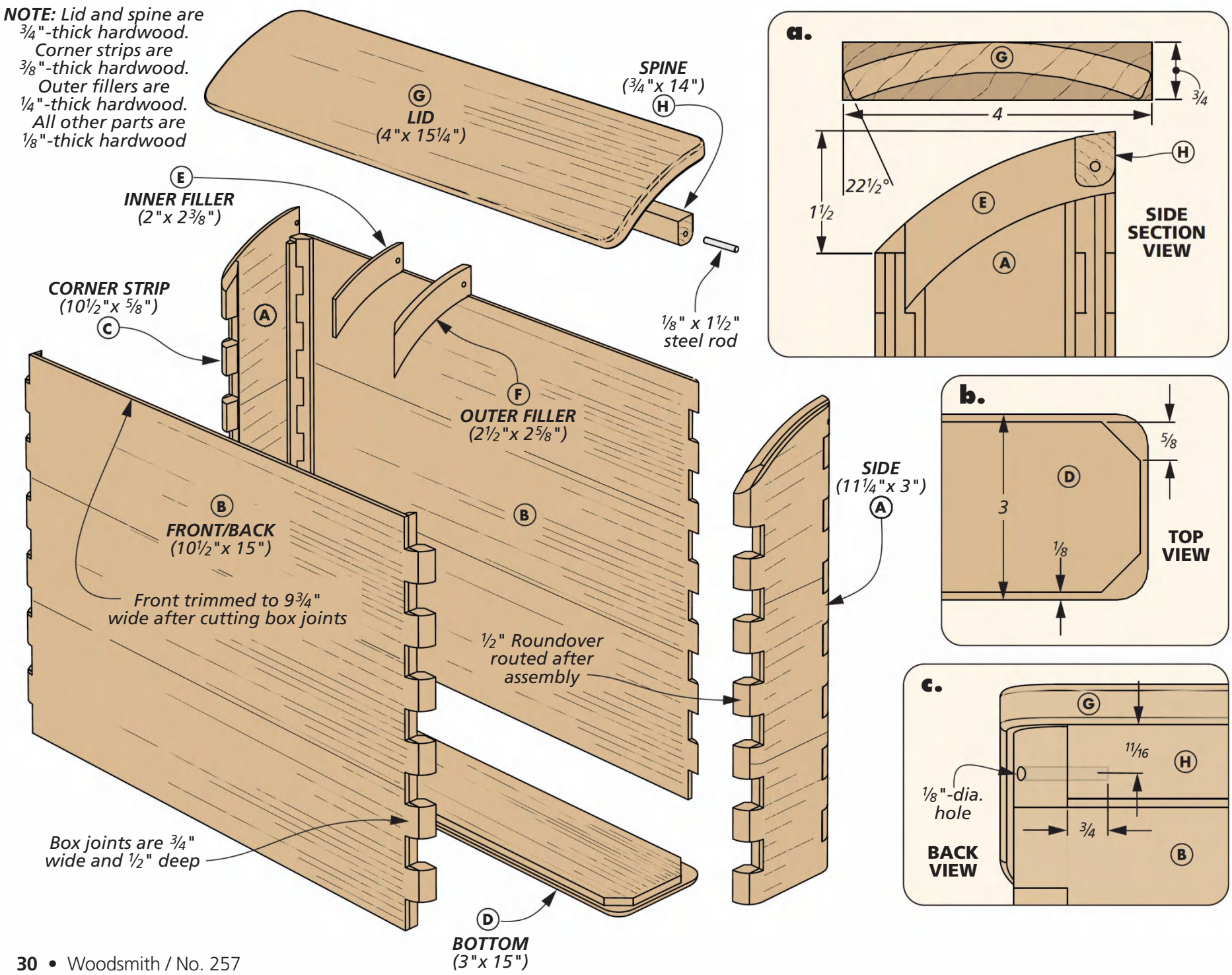

getting clean cuts and joints that fit together without gaps.

Cut the curved profiles in the sides and trim the front before gluing the case together. The long edges are rounded over at the router table.

The bottom of the case is rabbeted to create a stronger assembly. You need to trim the corners back to wrap around the corner strips inside.

THE LID. The contents of the satchel are protected by a hinged solid wood lid. The lid is curved to match the shape of the sides. I used a dado blade in the table saw to hollow the bottom of the lid. For a change of pace, hand planes offer a surprisingly quick way to both shape and smooth a fair curve on the top side.

The lid hinges on a pair of pins. These are anchored in filler pieces that are glued to the top edges of the sides. Here again, the shape of these pieces matches the shape of the sides.

On the lid side, there's a long thin spine glued to the bottom of the lid. It houses the pins and allows the lid to open and close.

Before installing the lid, give the case and lid a thorough sanding. Ease the bottom to eliminate the sharp edge and prevent chipping.

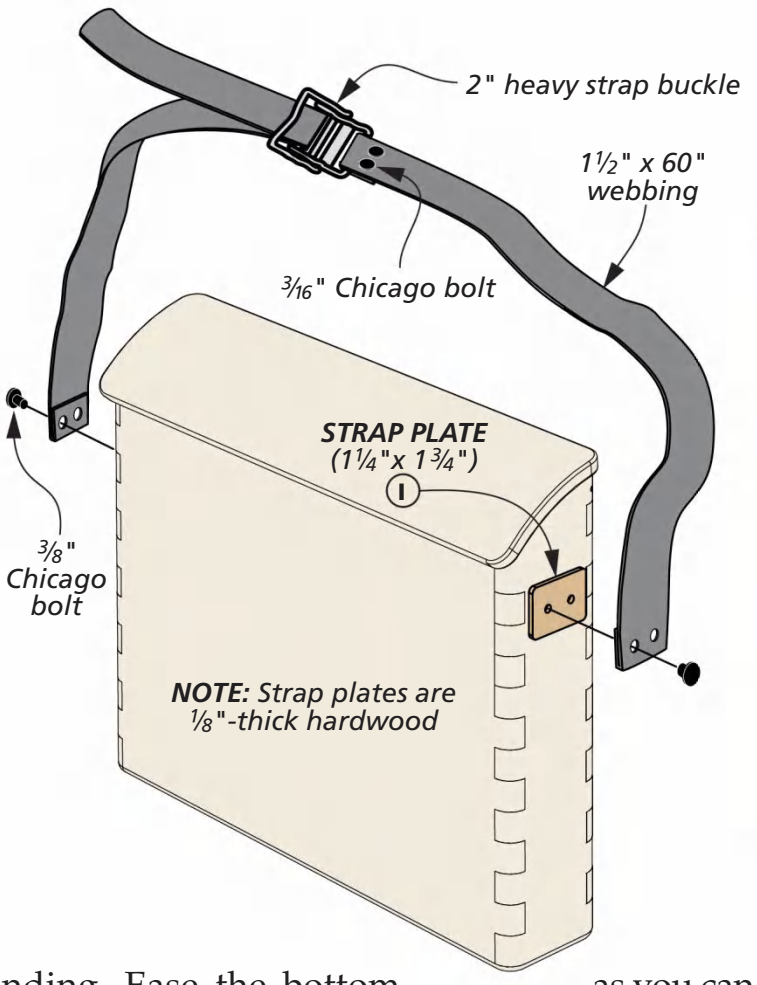

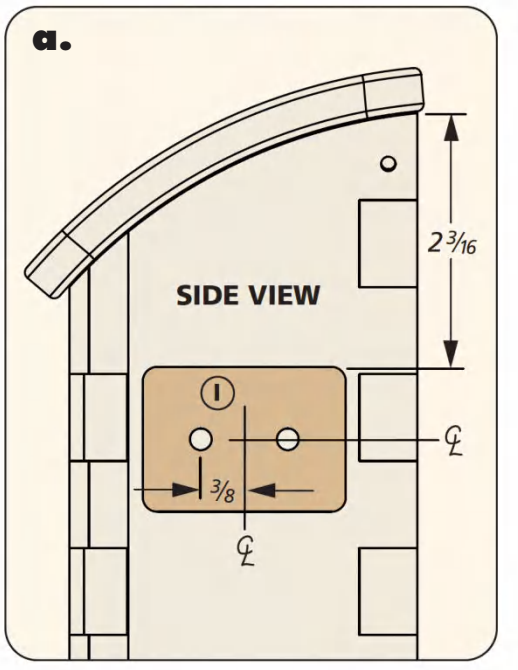

SHOULDER STRAP

An adjustable shoulder strap makes carrying the satchel comfortable whether it's on the shoulder or across the body. This is shown in the drawing above.

To prevent the straps from pulling out, a pair of plates are added on the outside of the case, as you can see in detail 'a.' The straps are held by two-part Chicago bolts. I folded the strap over on itself to prevent fraying.

FINISH DETAILS. I used a cloth to apply a coat of shellac followed by wax to the inside of the case. This creates a smooth surface without lingering odors. A coat of oil-based finish brings out the color in the walnut on the outside. Build up coats to increase protection and sheen. W

Materials, Supplies & Cutting Diagram

A	Sides (2)	1/8 x 11¼ - 3
B	Front & Back (2)	1/8 x 10½ - 15
C	Corner Strips (8)	3/8 x 10½ - 5/8
D	Bottom (1)	3/8 x 3 - 15
E	Inner Fillers (2)	1/8 x 2 - 2⅜
F	Outer Fillers (2)	¼ x 2½ - 2⅝
G	Lid (1)	¾ x 4 - 15¼
H	Spine (1)	¾ x ½ - 14
I	Strap Plates (2)	1/8 x 1¼ - 1¾

- (2) 1/8"-dia. x 1½" Steel Rods
- (2) 3/16" Chicago Bolts
- (4) 3/8" Chicago Bolts
- (1) 1½" x 60" Polypropylene Webbing
- (1) 2" Heavy Strap Buckle

1/8" x 7 ½" - 72" Walnut (3.8 Sq. Ft.)

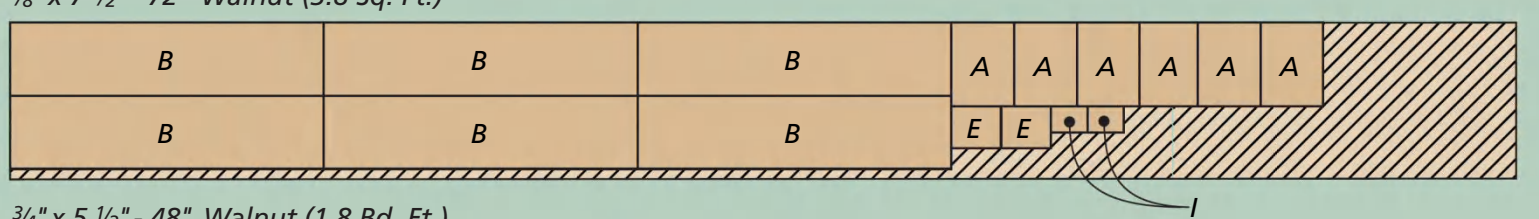

¾" x 5 ½" - 48" Walnut (1.8 Bd. Ft.)

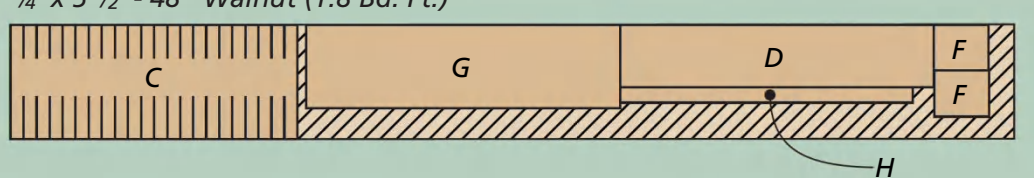

SHOP Project

Fine Tool Cabinet

You can spoil yourself with this project. That's okay, you deserve a tool cabinet that houses the tools for the quiet tasks of your woodworking journey. And it's guilt-free — this beauty will last a lifetime and more.

Although this cabinet is being presented as a shop project, it could've easily qualified for the heirloom category. It's not often that you see a Shaker piece like this getting such a face lift. That's right, at its core this is a Shaker-style cabinet. There's the tidy symmetry of the design, and solid no-nonsense joinery. The only hardware are the hinges and the screws for the drawer knobs. Looks and smells like Shaker to me.

But it's the black accents of the drawer knobs, drawer dividers, and beads that trim the door panels that can throw you off the Shaker scent. Not to mention the added flair of book-matched ambrosia maple veneer on the doors and drawers.

Coming back down to earth you've got the perfect pairing of working with compliant cherry for the dovetails in the upper case and maple to give long life to the drawers. Did I mention the bridle joints on the doors? You've got work to do my friend.

▲ The upper cabinet provides plenty of room for the larger woodworking tools that you have in your arsenal. The adjustable shelves give you maximum flexibility when arranging the space.

▲ Five drawers in the top of the lower cabinet are ideal for keeping order of all the hand tools and accessories that a respectable woodworker needs close at hand.

Written by: Erich Lage; Project Design: Chris Fitch

Illustrations: Dirk Ver Steeg

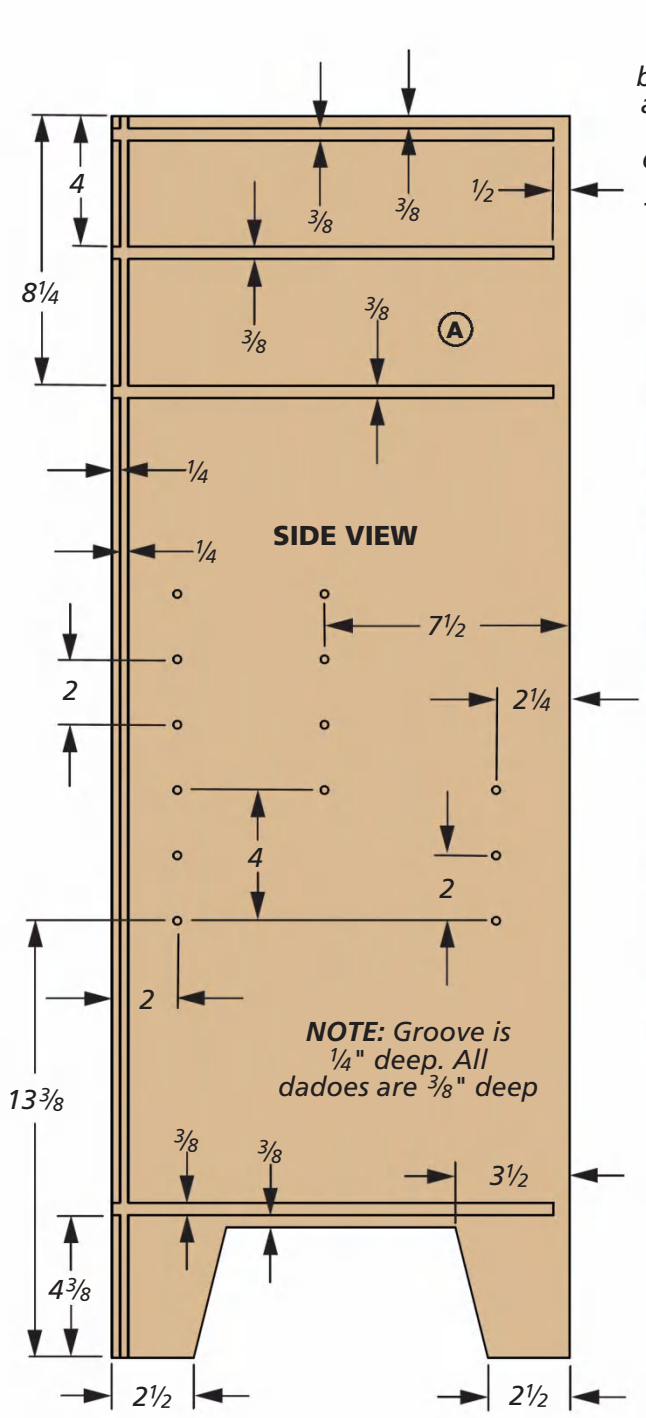

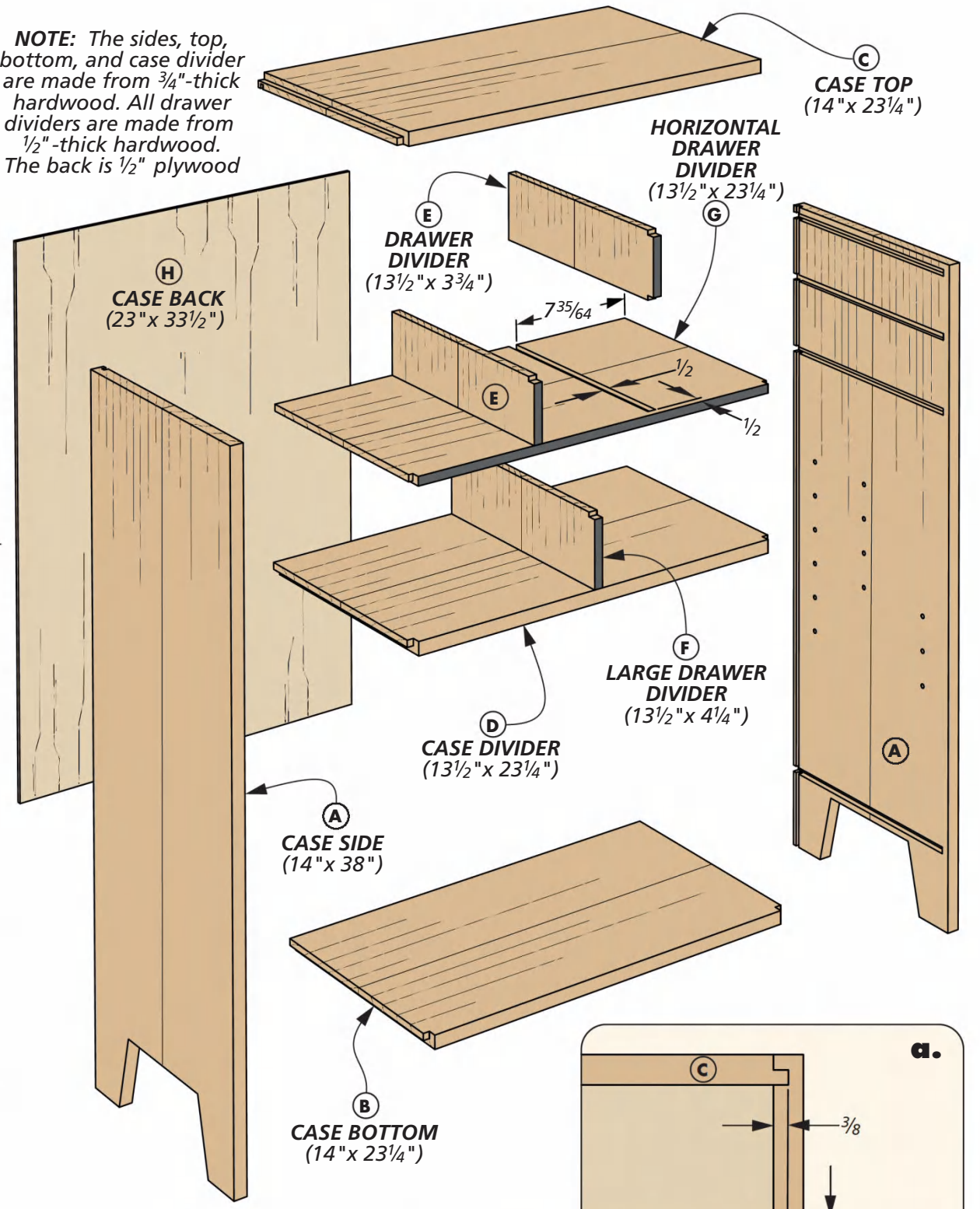

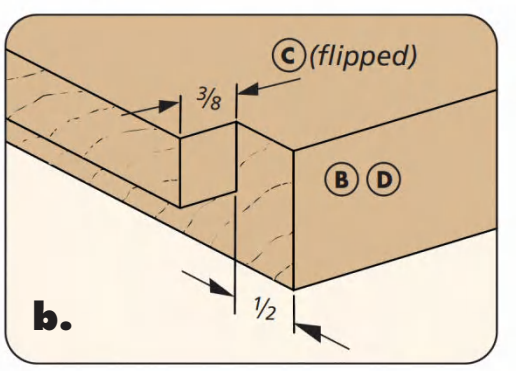

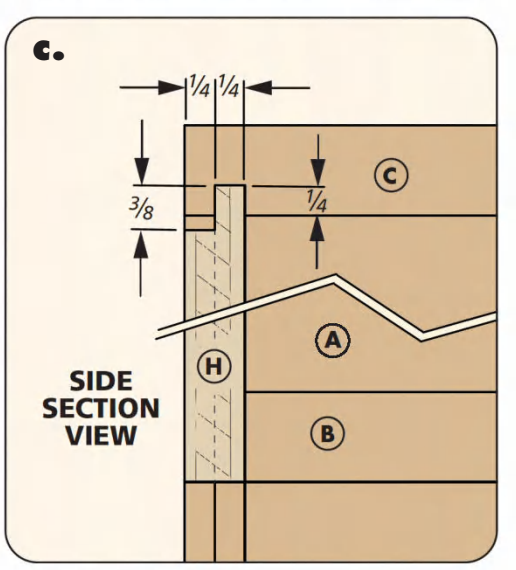

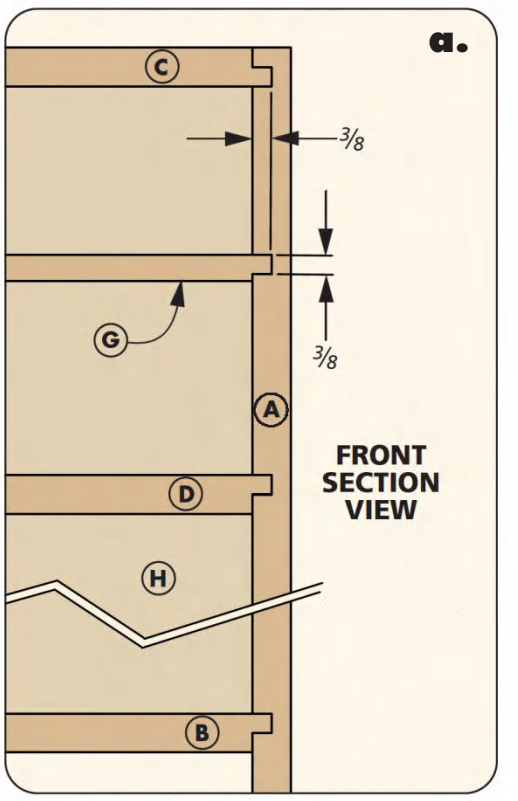

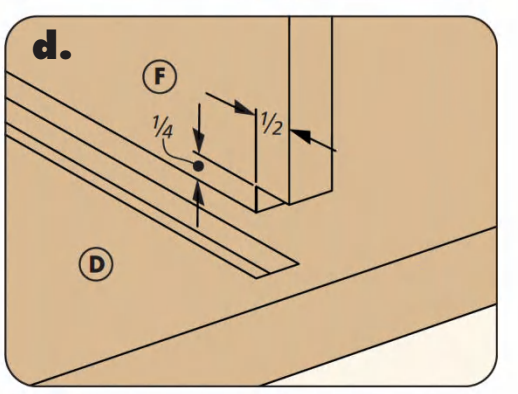

Kicking off with the **LOWER CABINET**

It would be easy to use plywood for the large panels in both of the cabinets on this project. But as I said in the beginning, this cabinet is going to be with me in the shop for a long time. So all hardwood construction is in order, it's a splurge of time and material that I'm willing to make.

WOOD SELECTION. Out of the gate the first investment of your time is selecting and matching the best parts of the wood to the parts of the case that will show. Then you can glue up the material for the sides and dividers.

LEG PROFILE. Notice the profile at the bottom of the side panels. I roughed those with a jig saw.

Then used a flush trim bit and a straight edge to make the profile crisp (Figure 1).

Drilling the shelf pin holes are next up on the to-do list. The lower cabinet has two sizes of adjustable shelves that you'll make later. To guarantee perfect alignment during lay out, I laid the panels face up and back to back. You can make a hardboard template to drill the holes.

GROOVES & DADOES. The stopped dadoes for the top, bottom, and dividers are made with a simple jig. The fence of the jig rides along the back edge of the side. Make the cut with a straight bit and a guide bushing (Figure 2). The long groove in the back is done at the router table.

PANELS & DIVIDERS

Next up are the horizontal dividers that bring the sides together. Also, you'll make the smaller drawer dividers. Notice that those drawer dividers (vertical and horizontal) are thinner than the other parts. Ultimately their front edges will be painted black to add some visual sass to the look of the cabinet.

TONGUES & DADOES. Start at the table saw making the offset tongues on the larger dividers. This is followed with some more stopped dadoes for the drawer dividers. The process for making these dadoes is the same as the ones in the sides. A notch in the front edge of the vertical drawer dividers is all that's needed to prep them for assembly. Speaking of assembly — that's what's up next.

ASSEMBLE THE CABINET. Bringing together six large parts, three smaller dividers, and a back can add up to what could be an anxious hootenanny if you don't plan ahead. But that's not you, you're a savvy fellow.

You start with all your clamps pre-gapped and close at hand. A bucket of warm water and plenty of rags to address any glue mess that might arise. And using slow set glue is a good idea as well.

With one side of the case face up, glue and fit the horizontal dividers in their respective dadoes. Then you can apply glue to the dadoes in the other side and drop it in place. To hold the assembly true, use several large plastic clamping squares in several of the corners.

When the glue is dry and the clamps are out of the way, put the vertical drawer dividers in place from the back side and clean up any glue that happens to squeeze out. All that's left to do now is slide the plywood back into its groove and nail it to top, bottom, and horizontal dividers. Now it's on to making some drawers and a good sized door to complete the lower cabinet.

PREPARING THE SIDES & DIVIDERS

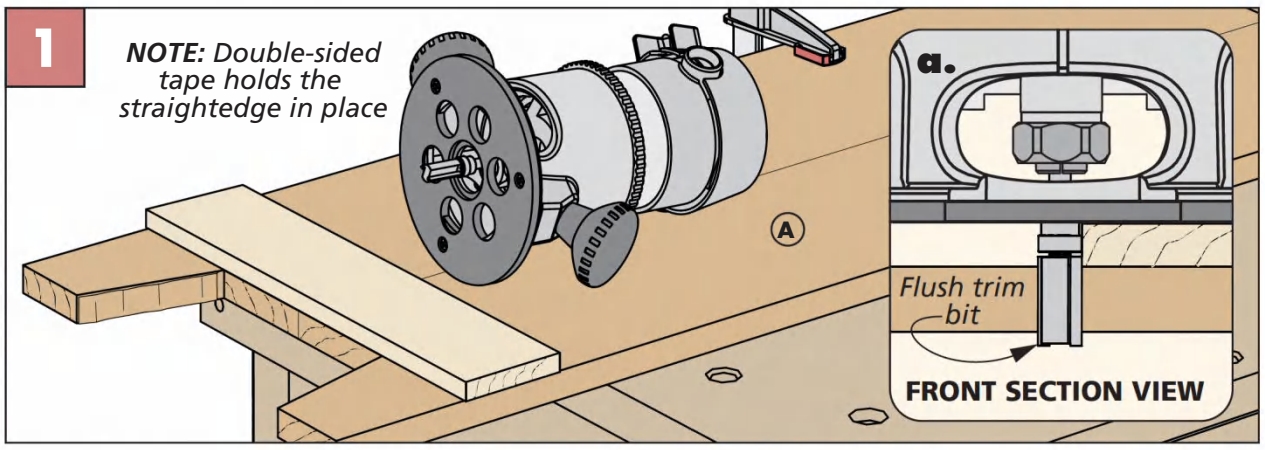

Refining the Legs. A jig saw gets the profile of side's legs close, but not perfect. For a crisp contour I used a flush trim bit in my router and the straightedge you see here.

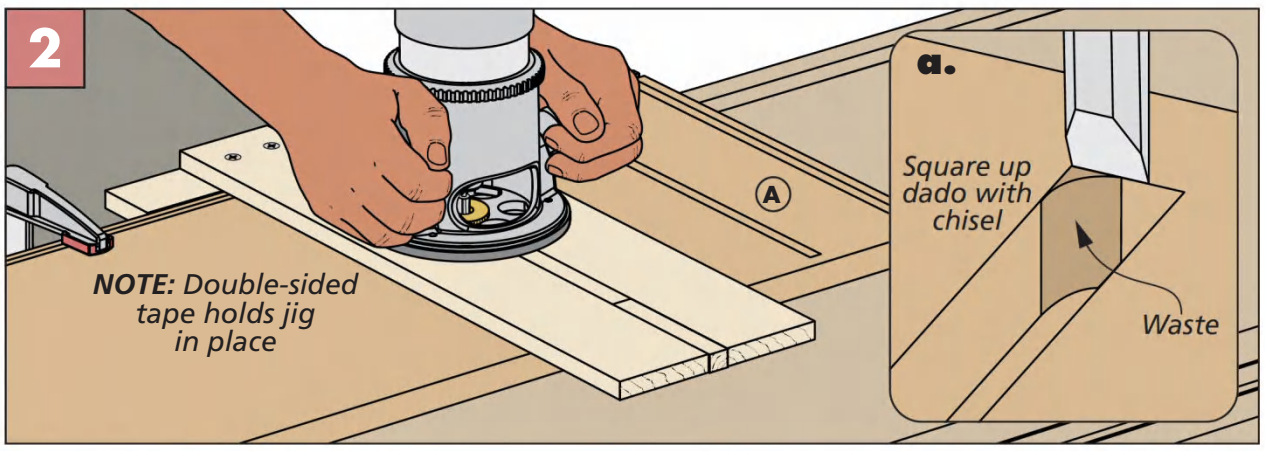

Stopped Dadoes. Your router, with a straight bit and guide bushing is up to the task of making all the stopped dadoes in the sides. Square the corners with a chisel.

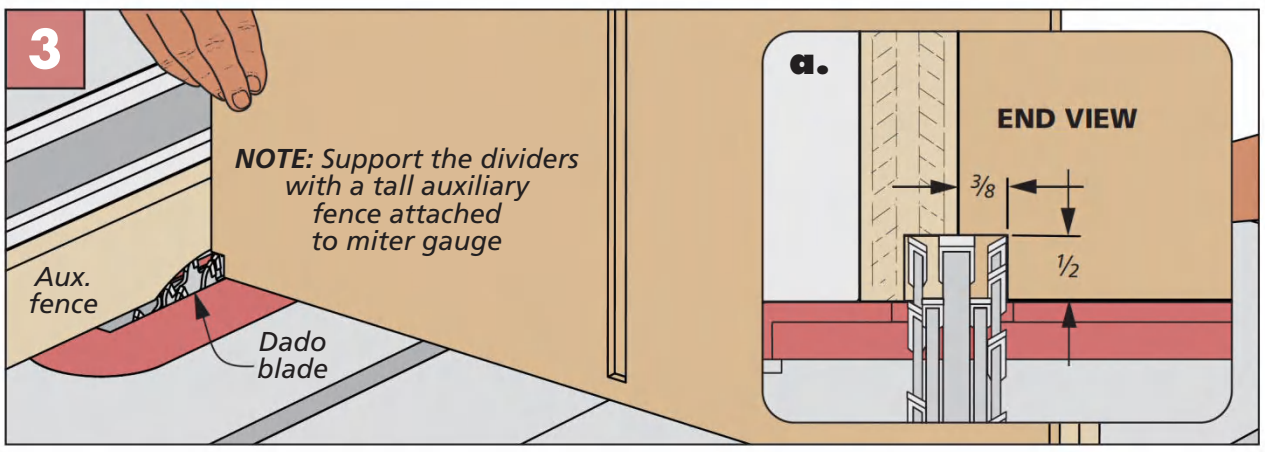

Notches in the Panels. All of the horizontal panels are notched on the front corners. Use your miter gauge with a tall auxiliary fence to support the panels while cutting.

GO 2 Online Extras

For more on the stopped dado jig, go to:

Woodsmith.com/257

Next Up, Some **DRAWERS & A DOOR**

The five drawers you see below provide you with plenty of storage options in the lower cabinet. Each drawer is stowed in an opening that's created by the drawer dividers.

LOCKING RABBETS. I like having the option of removing the drawer and taking it to the bench on occasion. This means you want a drawer that can stand up to some punishment — locking rabbets are just the ticket in this instance. So, it's off to the table saw for this joinery.

Detail 'd' below shows that the first order of business is to cut a centered groove in the drawer front. The depth of this groove matches the thickness of the drawer side.

Next you'll trim the drawer front along the back face to create the tongue. This tongue is half the thickness of the side. That task finishes the locking rabbet, now for the mating joinery that needs to be cut in the sides.

The drawer side gets a shallow dado to join with the front. The side also has a wider dado at the rear to hold the drawer back. Both of these dadoes are shown in detail 'd.' To finish the joinery phase of the drawer you need to cut a groove along the bottom edge of the drawer front and sides for the bottom (detail 'c').

Next up is assembling the drawers. Typically the joinery holds all the parts square, but I always double check just to be sure. While the glue is drying, there are a couple things to do. Make and install the foot glue block and the foot that goes on the front of the lower cabinet (detail 'a'). Also make and fit the adjustable shelves in the main drawing on the next page. Then it's back to the drawers, you can slide the bottoms in place and pin nail them to the drawer back. Now we need to consider our veneering strategy.

PLANNING A BEAUTIFUL COVER-UP

If you take a close look at the main photo at the beginning of this project you'll see that some thought went into how the

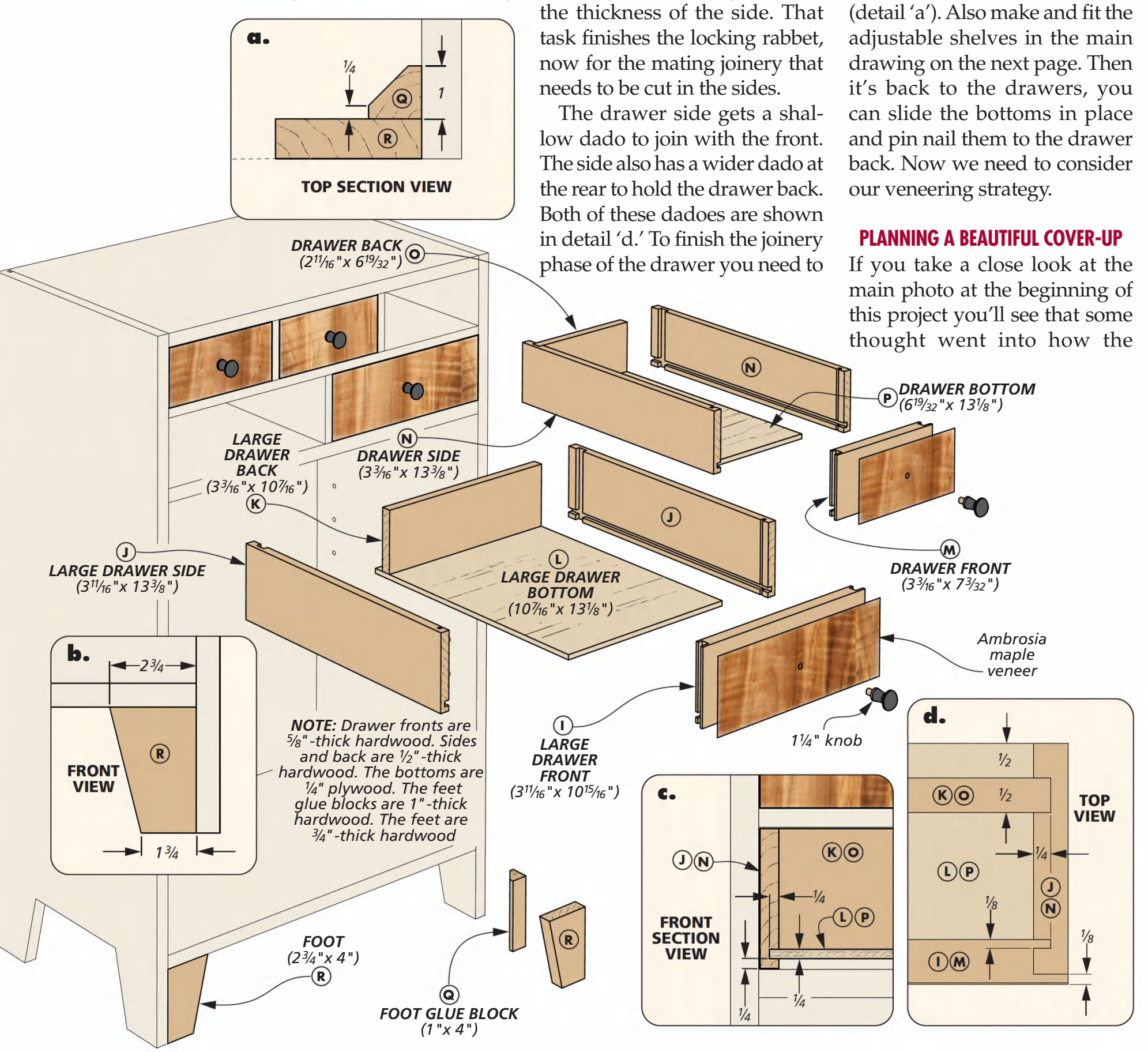

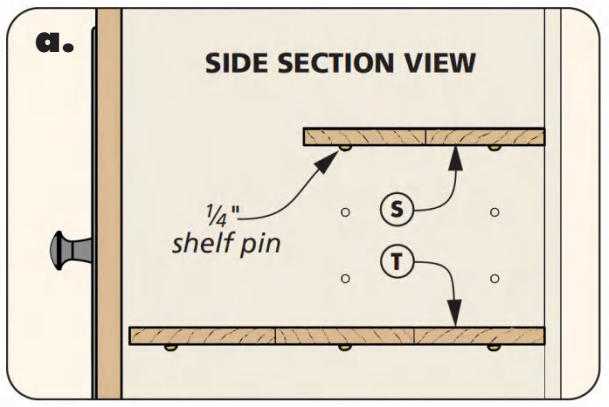

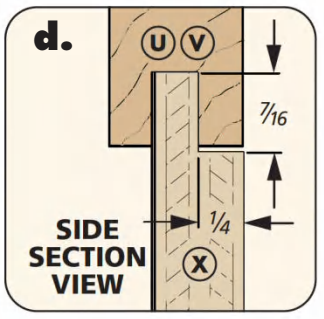

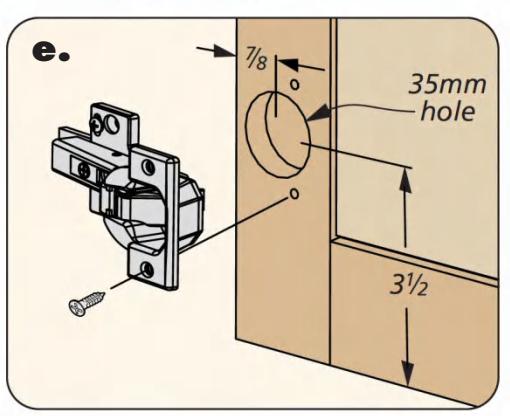

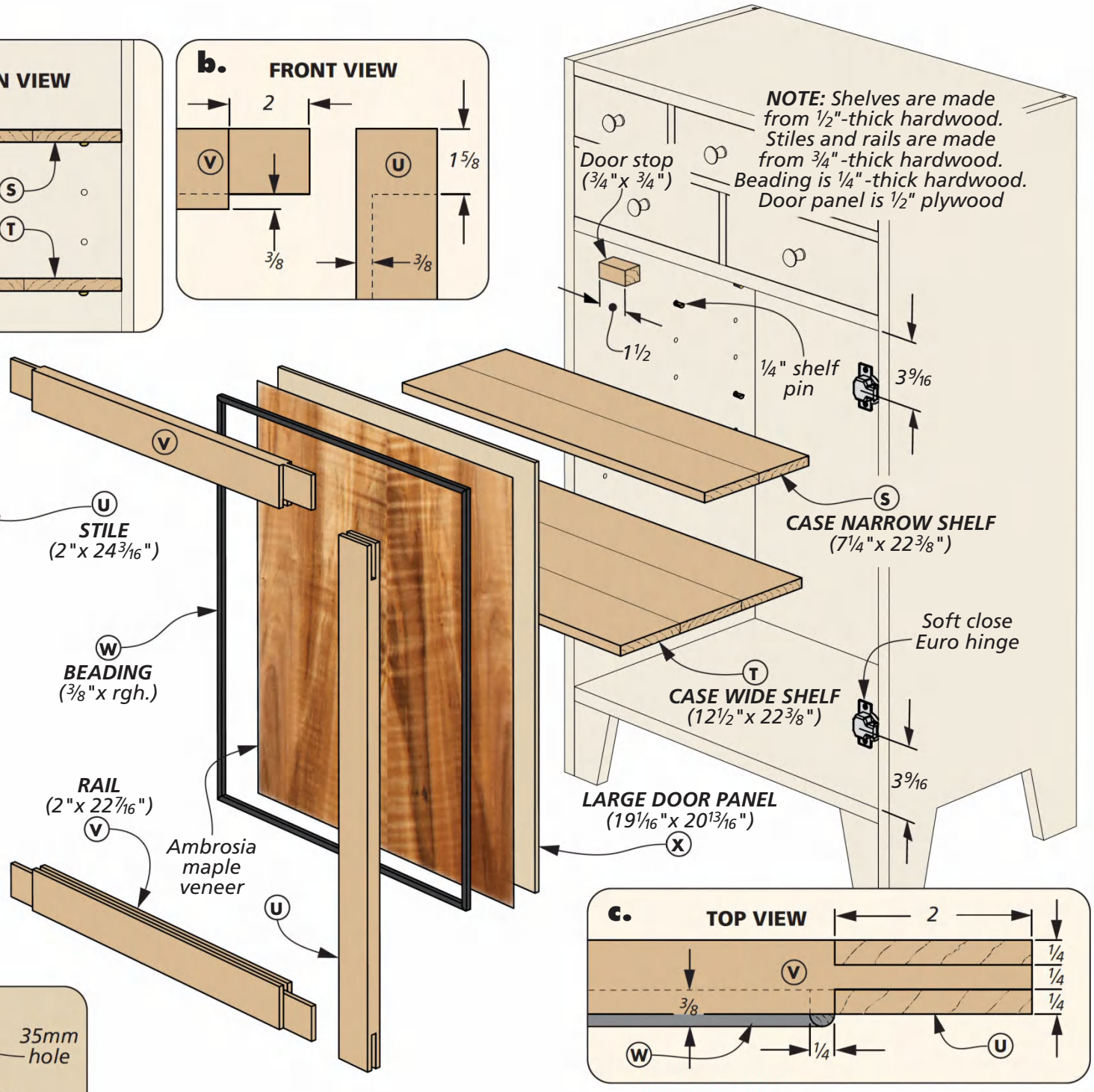

veneer was applied. This beautiful paper-backed ambrosia maple veneer is worth the effort.

From bottom to top you have three visual sections to navigate. The large bottom door called for a centered bookmatch. The drawer fronts are a visual transition so let the veneer speak to that with straight vertical grain and subtle patterns. The upper doors echo the bookmatch of the bottom door. This an example of how you might approach the look of your veneer presentation.

As for how to apply the veneer I used a spray adhesive from 3M, *Hi-Strength 90 Spray Adhesive*, it's available at local home centers or online. You'll want to veneer the plywood panels for the doors before you build them, which is up next on the to-do list.

THE DOOR. The door you see above (and the ones for the upper cabinet) use a type of joinery that goes by a trio of names: open mortise and tenon, bridle joint, or slip joint (details 'b' and 'c'). Regardless of the name, they're all made the same way. You'll find more on this technique on page 40 and at *Woodsmith.com/257*.

To prepare for that joinery work you'll need to cut the groove on the inside edge of the stiles and rails for the plywood panel. And drill the holes for the hinges in the stiles.

SOME ASSEMBLY. As you see in the drawing above, before assembling the door you'll have to add the veneer and cut the rabbet in the back, see detail d. Now you can glue up the door. While it's drying, there's some beading that needs to be made.

BLACK BEADING. The mitered beading that runs around the inside edge of the door frame (detail 'c') is made in several stages. First plane an extra-wide board to final thickness. Then rout both edges before cutting the strips free. Repeat this process until you have all the material needed for all the doors.

You can miter and dry fit the beading, but for a crisp look, paint them before gluing them in place. Then install the hinges as shown in detail 'e'.

For instructions on making a bridle joint, go to:

Woodsmith.com/257

Now, a Strong **UPPER CABINET**

The upper cabinet hovers around eye level so it's appropriate to show it off a little. Dovetail joinery answers that call nicely, with the added benefit of rock-solid strength. But before we start crafting dovetails, there are two other details to be addressed.

SHADOW BAND. In the main drawing, along with details 'b' and 'c,' you see that the cabinets are separated by a frame that's recessed on the front and sides. This recess casts a slight shadow between the two adding an accent that pairs well with the black drawer dividers that are the same thickness.

The shadow band is simply four boards. The front is mitered on both ends, the sides are mitered on the front and cut square on the back. The back board is square on the ends. You can glue the band together. Then set it aside for later.

Also, cut the plywood back to size and rabbet the back edge (details 'a' and 'd'). Now you can turn your full attention to the case parts of the upper cabinet.

PREPARING FOR DOVETAILS

The actual cutting of dovetail joints, compared to the steps taken to make that task as effortless as possible, is the shorter of the two duties. So let's get started with wood selection.

PICKY PICKY. I mentioned earlier that it's worth the time spent selecting the wood for this project. This is never more true than here. You want the sides, top, and bottom to be flat, smooth, and square. No twists, crooks, crowns, or any other shenanigans that will make you wish you'd stuck with photography as a hobby.

Now that you have these panels in proper shape, mark the of the outside face and the top edge of each board with a pencil.

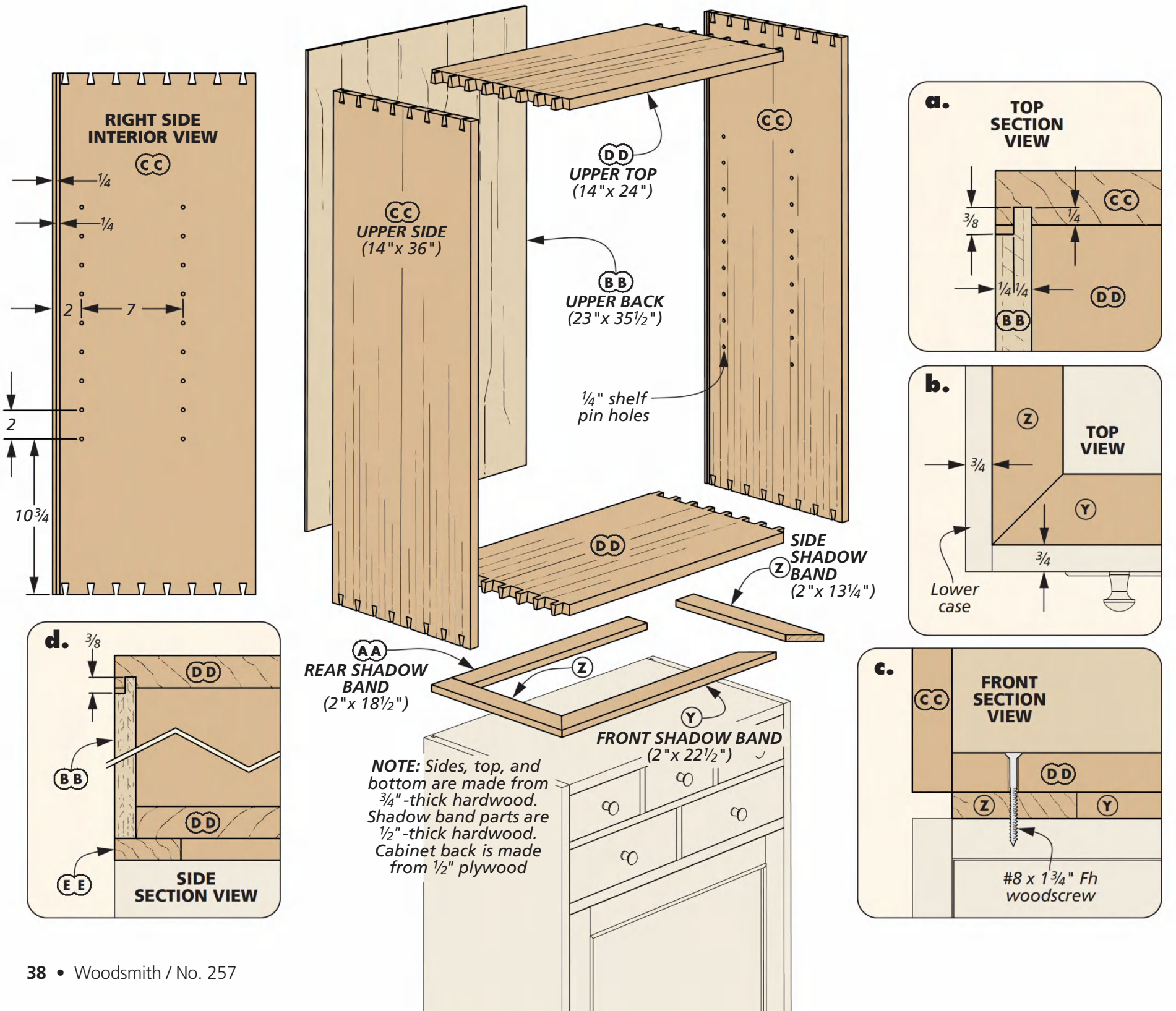

With that done, you can drill the shelf pin holes and cut the groove for the back in the panels. You'll need to rip this groove off the bottom panel. But wait to do that until the dovetails are done.

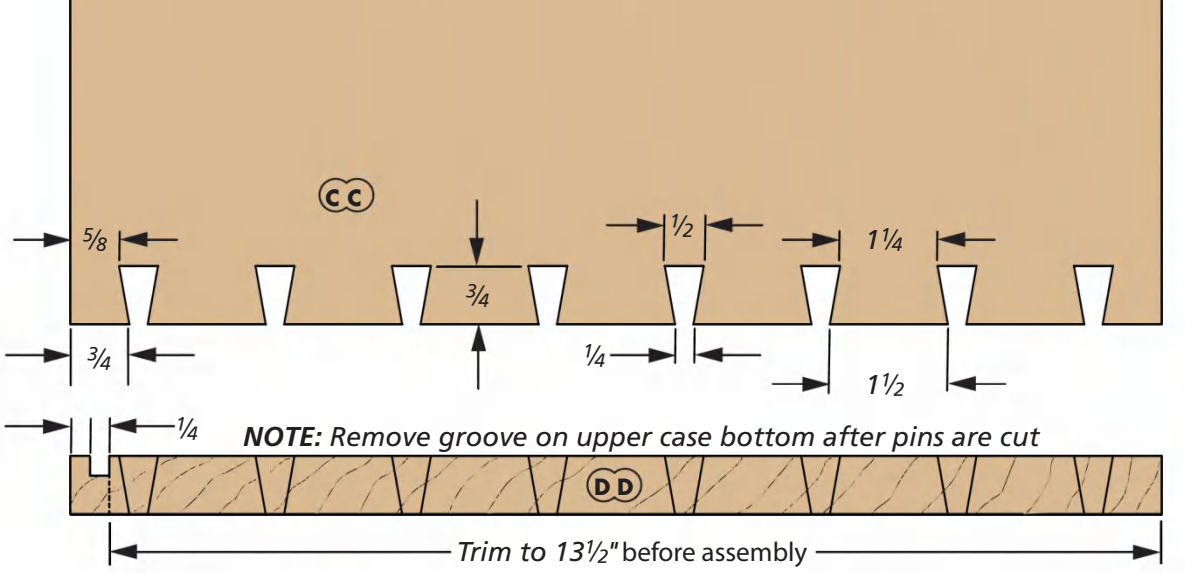

DOVETAILS

The drawing upper right gives you the measurement for the tails that you need to cut on the sides. I drew this layout with a sharp pencil on one end of one of the sides. Figure 1 below shows how to transfer the layout to the other ends of the sides.

Figure 2 focuses on cutting the tails with a back saw. To end these cuts right at the baseline, keep the outside faces towards you. Detail 'a' shows how to clear out the waste evenly across the baseline. With all the tails cut and cleaned up, you can turn your attention to the pins.

PINS. For perfectly mating pins use its mating tail as a template (Figure 3). Cutting the sides of the pins is the same routine as the tails. But there's a lot more waste to remove, so I turned to the bandsaw for help. (Figure 4). To clean up and undercut the baseline, use a backing board like you did on the tails. Before gluing up the cabinet, cut the groove off the bottom at the inside wall of the groove.

ASSEMBLY. Steve Johnson, one of our resident wizards in the shop chose to use epoxy for the assembly of the upper case. It has a slower set time and no water to cause the joinery to swell. Clever fellow. Turn the page for the last few things to do on this project.

SUCCESSFUL DOVETAILS

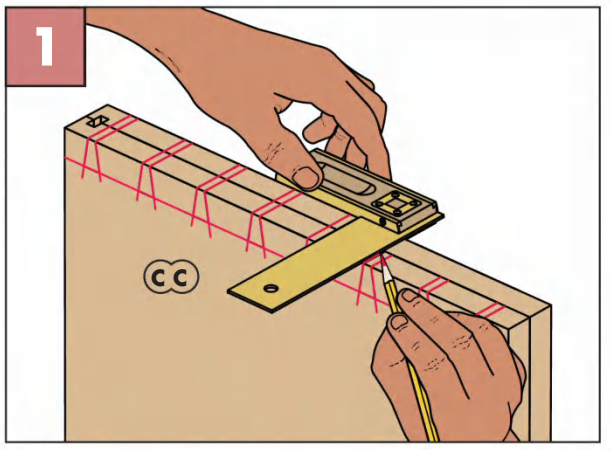

Error-Free Layout. Draw the tail layout on one board then use that as the master for the tops of the tails on the others.

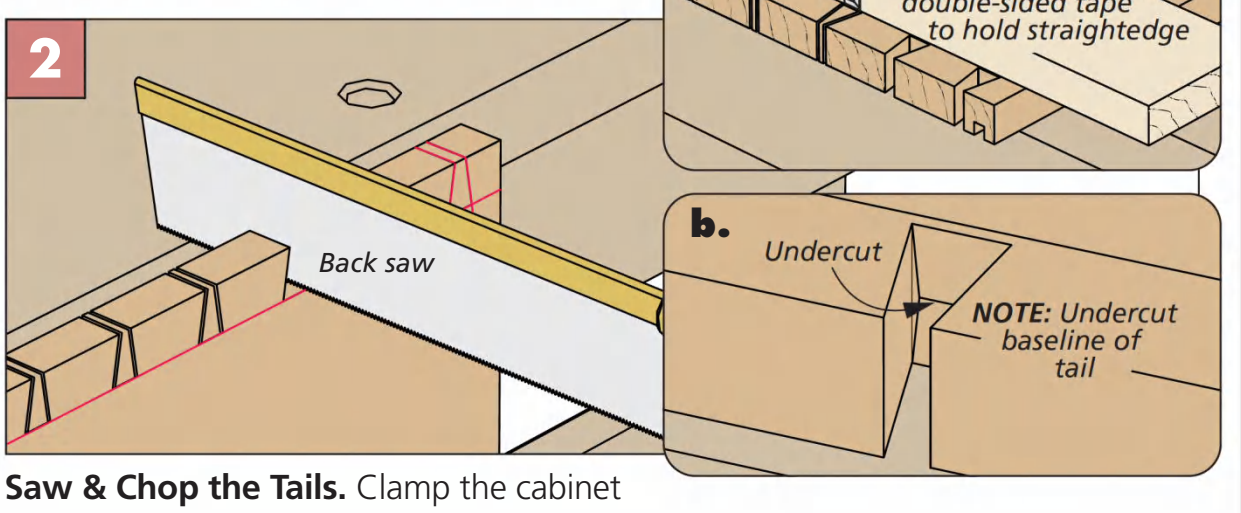

Saw & Chop the Tails. Clamp the cabinet side in your vise at the bench and cut the sides of the tails. Clean up the tail with a chisel. For a crisp, square baseline, use a straightedge at the bottom of the tails.

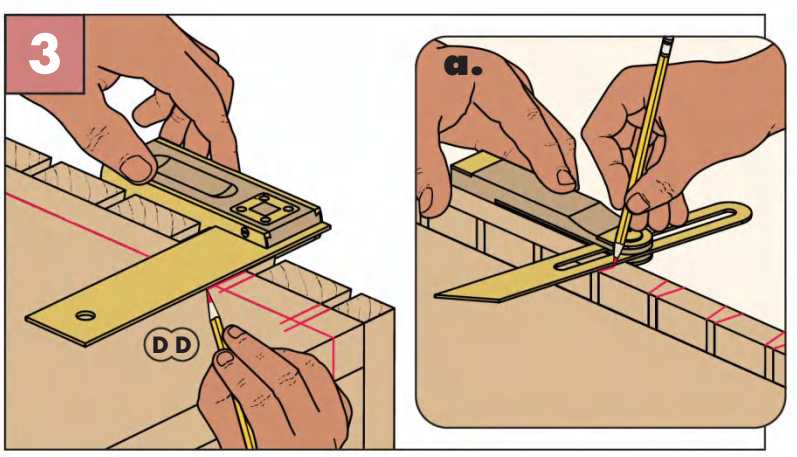

Pins Meet Tails. For a perfect joint, use the tail to trace mating pins on the side's adjoining boards. A sharp pencil or marking knife works best.

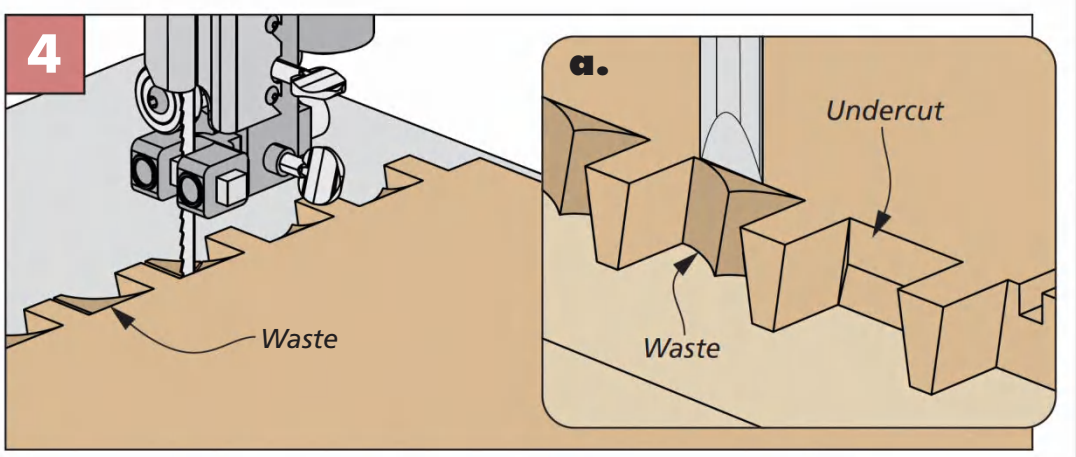

Rough out the Waste. After defining the pins with a back saw, you can rough out the waste areas of the pins at the bandsaw. For a tight joint between the boards, undercut the shoulder of the joint (detail 'a').

Upper Cabinet **FINAL DETAILS**

Now that your adventure in making dovetails is in the rear view mirror, you can turn your attention to the rest of the upper cabinet. There's not much left, just two doors and four shelves. First, glue up the material for the shelves and set them aside while you work on the doors.

The doors for the upper cabinet employ the same joinery as the large door for the lower cabinet — bridle joints. There we talked quite a bit about the veneering process. So here, we'll focus a little more on the joinery that holds the door together.

But first, a little housekeeping. Start by cutting the groove (detail 'a') that runs along the inside edge of the stiles and rails for the plywood panel. Then drill the holes in the stiles (detail 'a' and 'b') for the hinges.

As you see below, the stiles have an open mortise on each end that mates with the tenons on the rails. All this glue surface makes for a strong joint.

OPEN MORTISE FIRST. I started with the open mortises that are on the ends of the stiles (detail 'a'). To make this cut you have to stand the board on end and set the blade height to the width of the rail. To do this safely, you'll need a jig that rides along the fence and will hold the stile while making the cut.

I mentioned earlier that you'll find instructions on making this joint at *Woodsmith.com/257*. You'll also find details about how to make the jig as well. The joint is visible on the end, so use a backer to prevent chipout.

TENONS NEXT. The tenon length, like the mortise depth, is the width of the stile. This part of the joint is a lot easier to make.

You don't want any chipout on the rails either, so use an auxiliary fence on your miter gauge to support the rail. The fence acts as stop for the shoulder cut of the tenons. Then you can nibble away the rest of the waste. That task finishes the joinery for the doors. Next, prepare

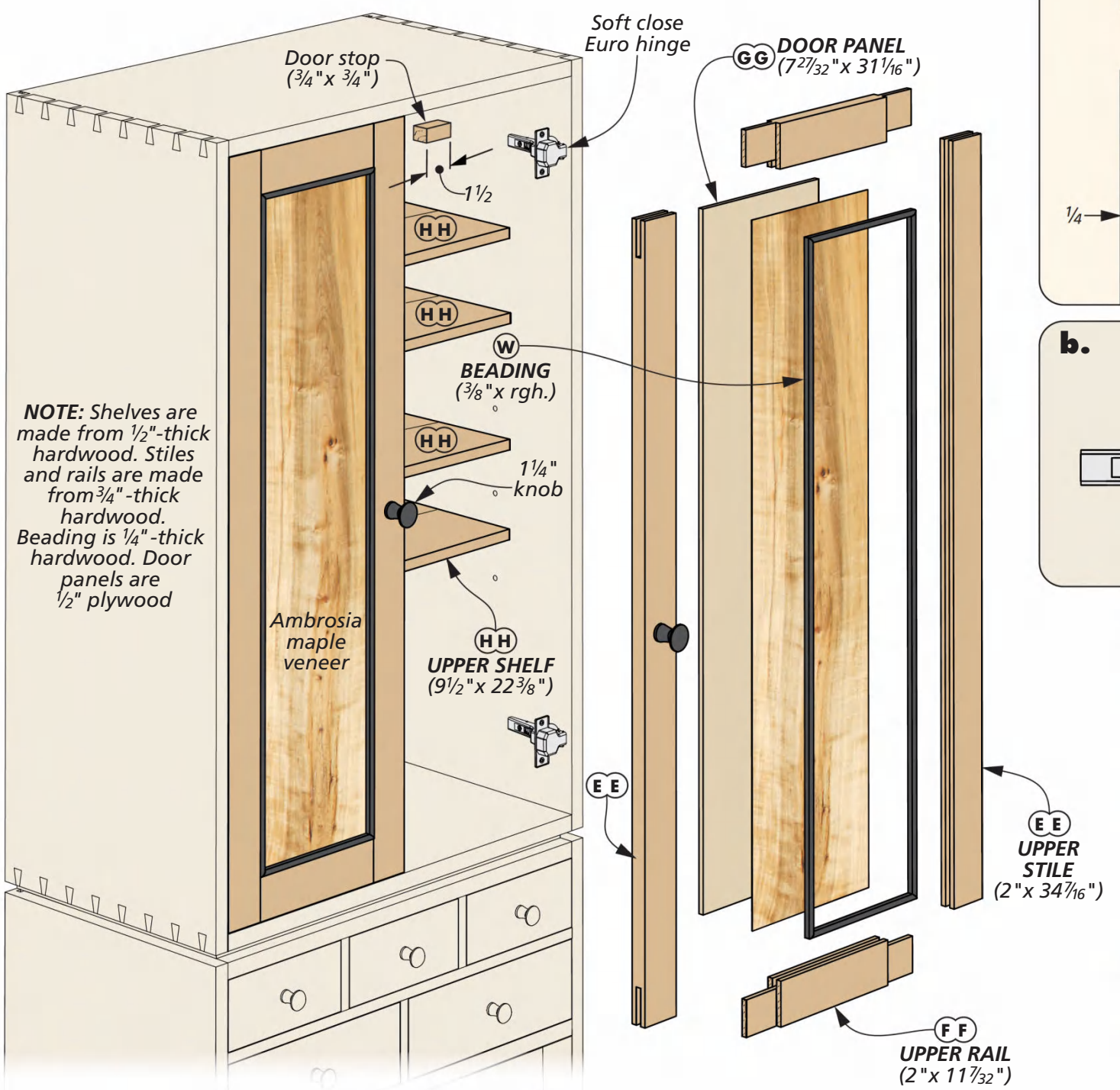

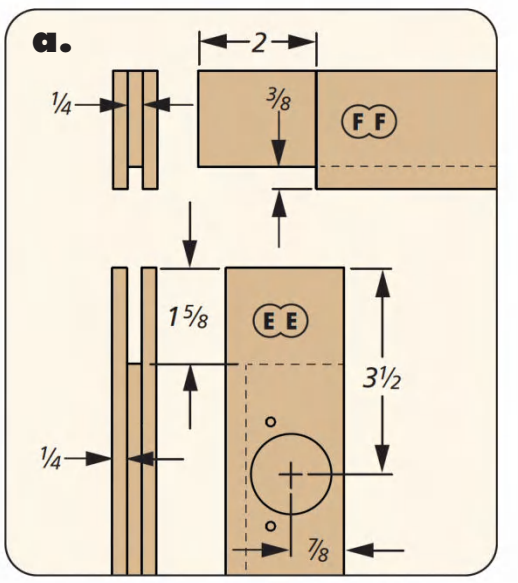

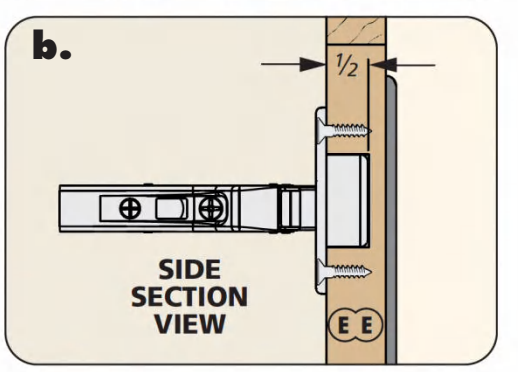

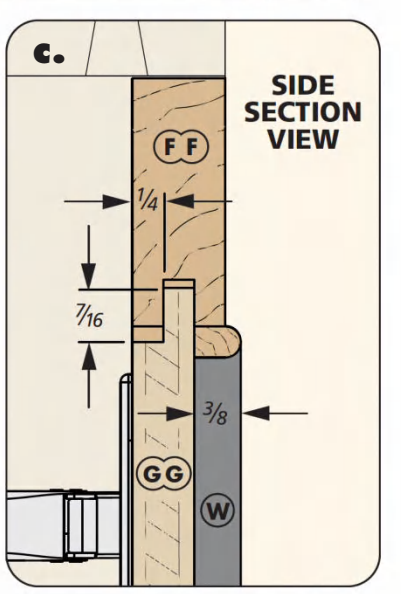

the plywood panel for the glue-up stage.

PLYWOOD PANEL. Start off by gluing the veneer to the outer face of the doors. Then cut the rabbet on the back side (detail 'c'). That sets the stage for gluing up the doors. When the clamps are stowed away, all that's left to do is to miter and install the black beading along the inside edges.

Now trim the shelves to length and move the cabinets into their new home. If you've got a hankering to split the two apart, the box to the right addresses that. W

HANGING OPTION

► The upper cabinet can stand all on its own, well, hang on its own anyway. The ½" plywood that's rabbeted into the back is plenty strong to hold the cabinet. Just make sure that you hit at least two studs in the wall with four screws. Two towards the top, and two at the bottom of the cabinet.

Materials, Supplies & Cutting Diagram

A	Case Sides (2)	¾ x 14 - 38
B	Case Bottom (1)	¾ x 13½ - 23¼
C	Case Top (1)	¾ x 14 - 23¼
D	Case Divider (1)	¾ x 13½ - 23¼
E	Drawer Dividers (2)	½ x 13½ - 3¾
F	Lrge Drwr Divider (1)	½ x 13½ - 4¼
G	Horz Drwr Divider (1)	½ x 13½ - 23¼
H	Case Back (1)	½ ply. - 23 x 33½
I	Lrge Drwr Fronts (2)	⅝ x 3 11/16 - 10 15/16
J	Lrge Drwr Sides (4)	½ x 3 11/16 - 13⅜
K	Lrge Drwr Backs (2)	½ x 3 3/16 - 10 7/16
L	Lrge Drwr Btms (2)	¼ ply. - 10 7/16 x 13⅛
M	Drawer Fronts (3)	⅝ x 3 3/16 - 7 3/32
N	Drawer Sides (6)	½ x 3 3/16 - 13⅜
O	Drawer Backs (3)	½ x 2 11/16 - 6 19/32
P	Drawer Bottoms (3)	¼ ply. - 6 19/32 x 13⅛
Q	Feet Glue Blocks (2)	1 x 1 - 4
R	Feet (2)	¾ x 2¾ - 4
S	Case Narrow Shelf (1)	½ x 7¼ - 22⅜
T	Case Wide Shelf (1)	½ x 12½ - 22⅜
U	Stiles (2)	¾ x 2 - 24 3/16
V	Rails (2)	¾ x 2 - 22 7/16
W	Beading	¼ x ⅜ - 236 rgh.
X	Lwr Door Pnl (1)	½ ply. - 19 1/16 x 20 13/16
Y	Front Shadow Band (1)	½ x 2 - 22½
Z	Side Shadow Bands (2)	½ x 2 - 13¼
AA	Rear Shadow Band (1)	½ x 2 - 18½
BB	Upper Back (1)	½ ply. - 23 x 35½
CC	Upper Sides (2)	¾ x 14 - 36
DD	Upper Top/Bottom (2)	¾ x 14 - 24
EE	Upper Stiles (4)	¾ x 2 - 34 7/16
FF	Upper Rails (4)	¾ x 2 - 11 7/32
GG	Door Panels (2)	½ ply. - 7 27/32 x 31 1/16
HH	Upper Shelves (2)	½ x 9½ - 22⅜

- 24" x 60" Ambrosia Maple Veneer
- (8) #8 x 1¼" Wood Knobs
- (6) #8 x 1¾" Fh Woodscrews
- (20) Shelf Pins
- (6 pr.) Hinges

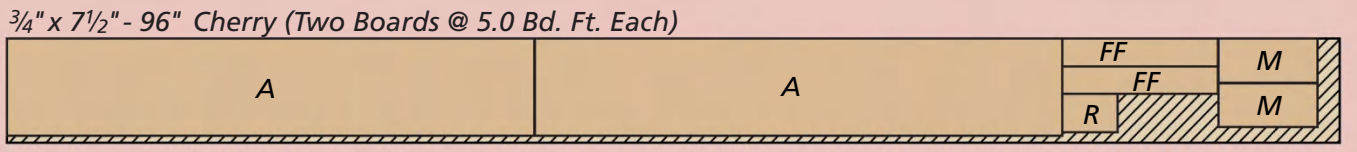

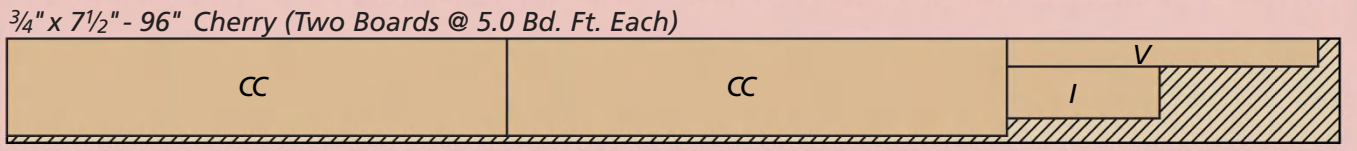

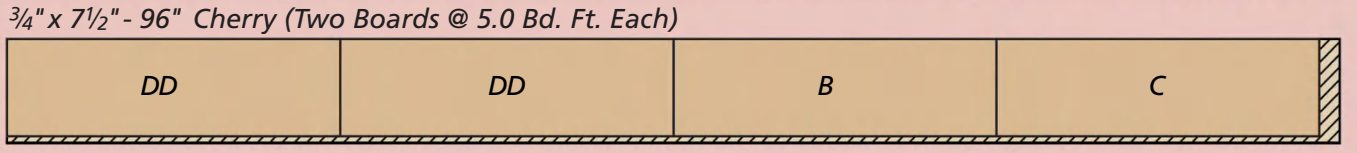

ALSO NEEDED: *One 48" x 96" Sheet of ½" Cherry Plywood, One 24" x 48" Sheet of ¼" Maple Plywood*

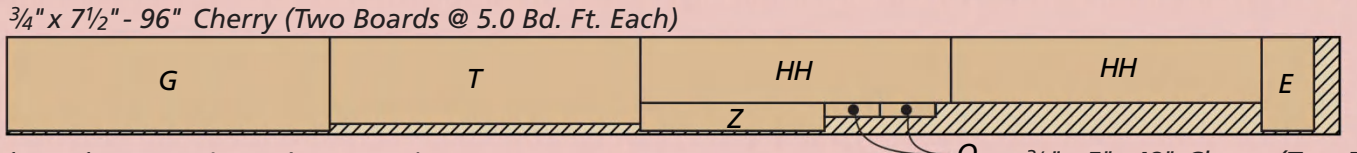

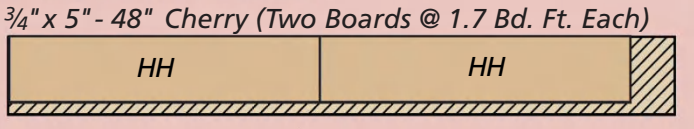

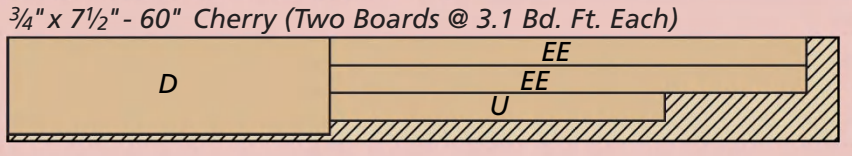

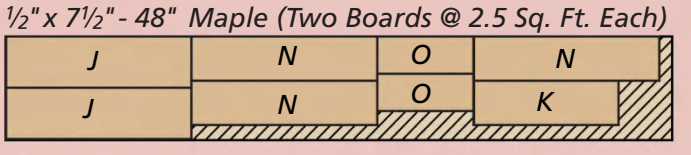

This sled, designed to ride, would serve equally as well as a cargo sled to pull items through snow.

Davos Sled

This classic, Davos sled is sure to bring smiles to the faces of children and adults alike.

Written by: Logan Wittmer; Project Design: Dillon Baker

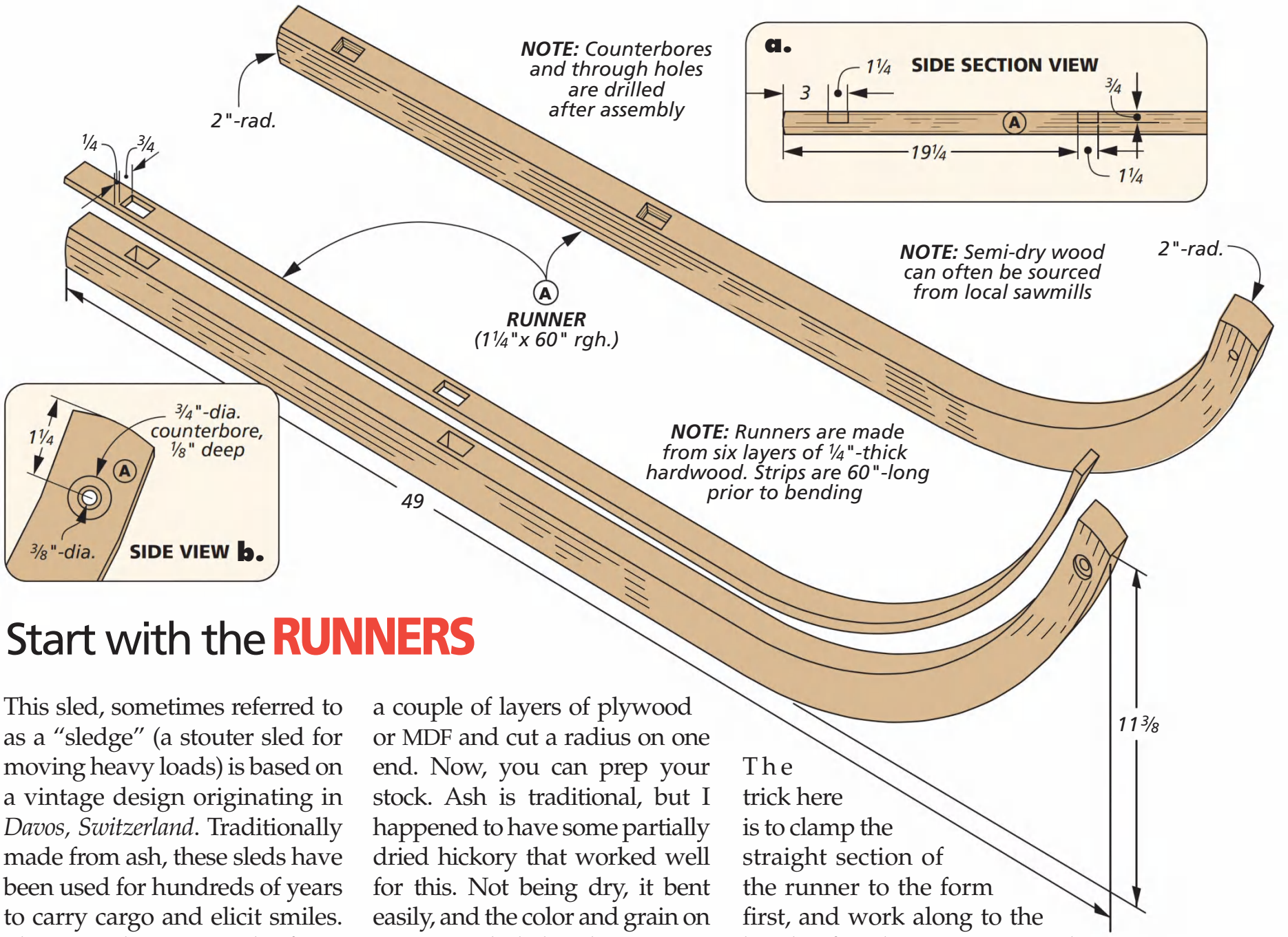

Start with the RUNNERS

This sled, sometimes referred to as a "sledge" (a stouter sled for moving heavy loads) is based on a vintage design originating in *Davos, Switzerland*. Traditionally made from ash, these sleds have been used for hundreds of years to carry cargo and elicit smiles. The most daunting task of any sled is creating the runners. But these runners are simple to build.

THE FORM. Start by creating a form, as you see below. Build up a couple of layers of plywood or MDF and cut a radius on one end. Now, you can prep your stock. Ash is traditional, but I happened to have some partially dried hickory that worked well for this. Not being dry, it bent easily, and the color and grain on it is particularly handsome.

Whatever stock you choose, rip a series of six strips for each runner. Plane them to thickness, then start spreading some epoxy. The trick here is to clamp the straight section of the runner to the form first, and work along to the bend. After the epoxy is cured, you can cut them to size (see drawing above) then drill and chop the mortises in the top edge of the runner.

COOL RUNNINGS

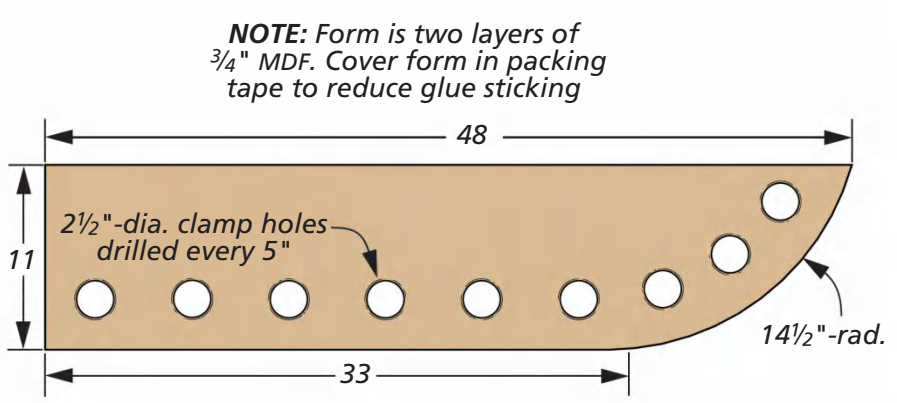

Bending Form. To create the curve for the runners, you'll need to glue up thin layers of wood. This form serves as a mold to clamp the runner to as the glue or epoxy cures.

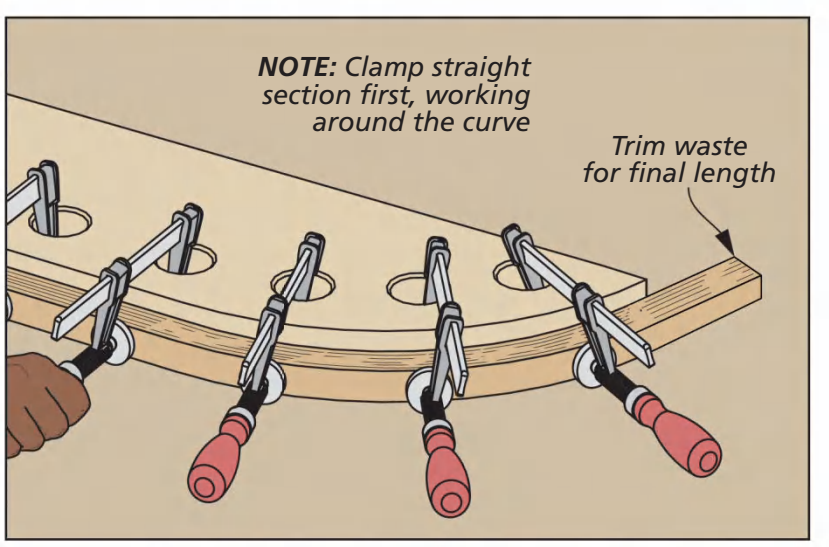

Plenty of Clamps. Use a series of holes drilled in the form to give clamps purchase. With bending forms, more clamps are always better.

Illustrator: Becky Kralicek

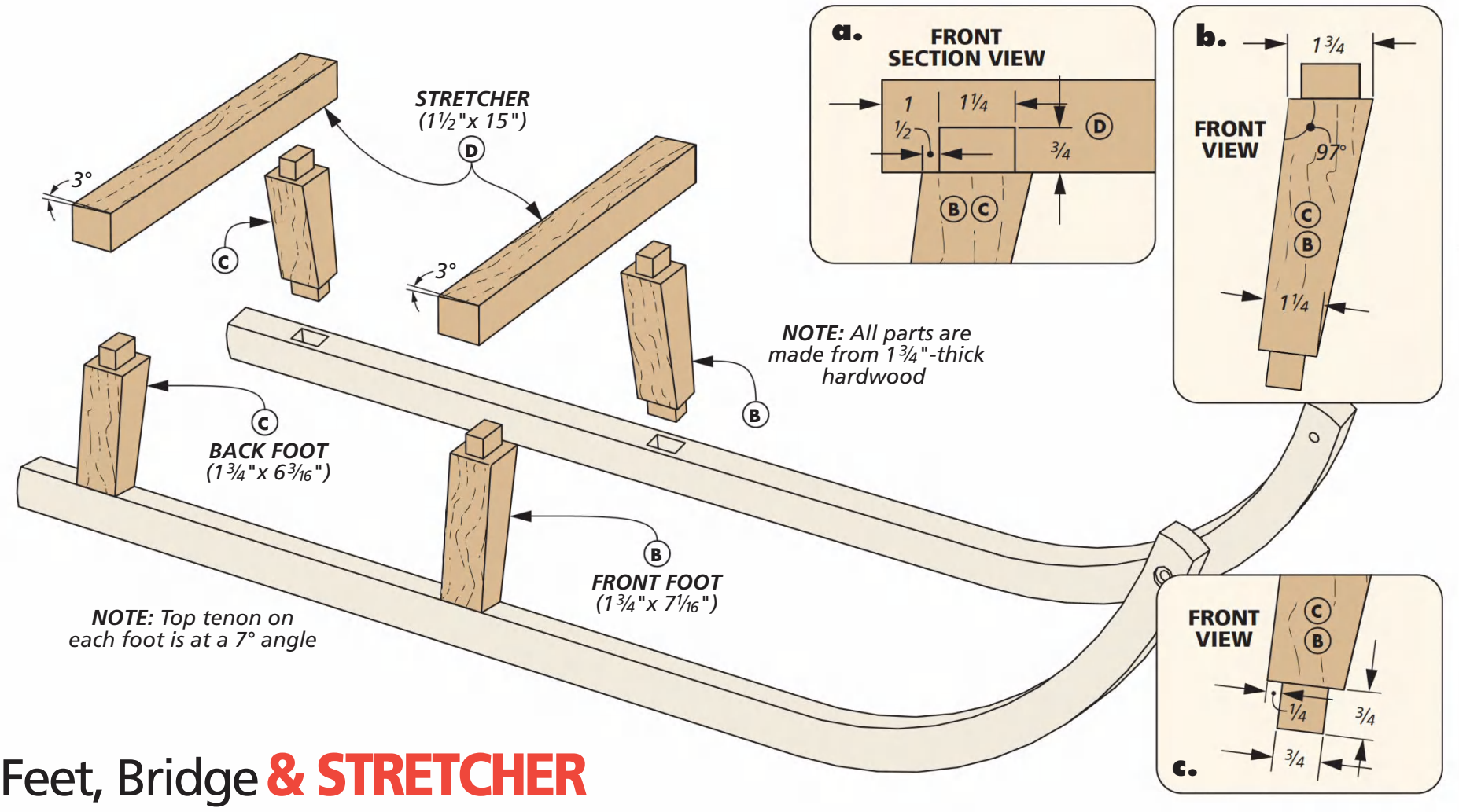

Feet, Bridge & STRETCHER

With the runners completed for now, set them aside and turn your attention to the structure that connects them. Here, we have two pairs of feet that support a pair of stretchers. This entire assembly sets at a slight angle, so you'll have to take that into account when creating the tenons. Don't worry though — I hate angled tenons as much as anyone, but they're not hard.

FEET. Looking at the feet, there are a couple of things to deal with. First, the front and back feet are different lengths. Second, they also have a tenon on each end. The lower tenon is square, while the top shoulder and tenon is angled at 7°. Cut the plumb tenon first. The table saw and a dado blade take care of this quickly. After that tenon's cut, you can move on to the angled tenon. See Figure 1 and 2 below.

After defining the shoulder and cheeks, mark the width of the tenon and saw away the waste. Use a chisel to pare the shoulder flush all the way around. Finally, cut the taper along the inside of the feet at the bandsaw. A few

CUTTING THE ANGLED TENON

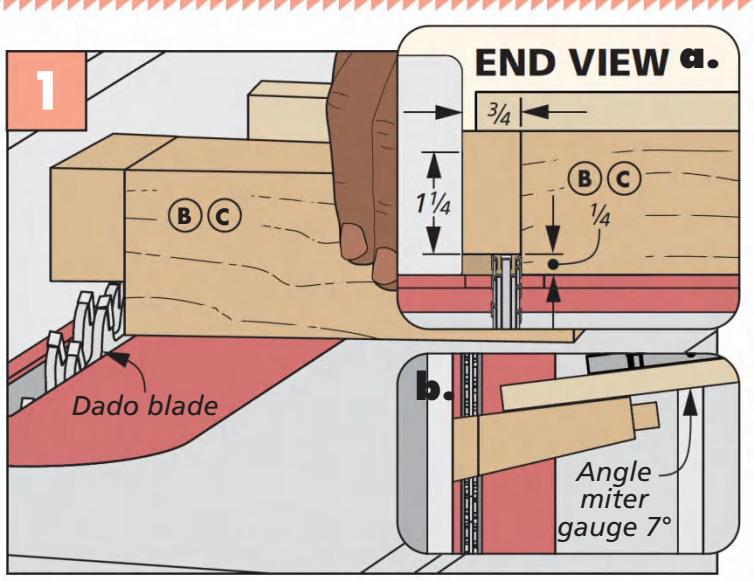

Angled Shoulder. Angle the miter gauge 7° and define one shoulder of the angled tenon on both the front and back feet.

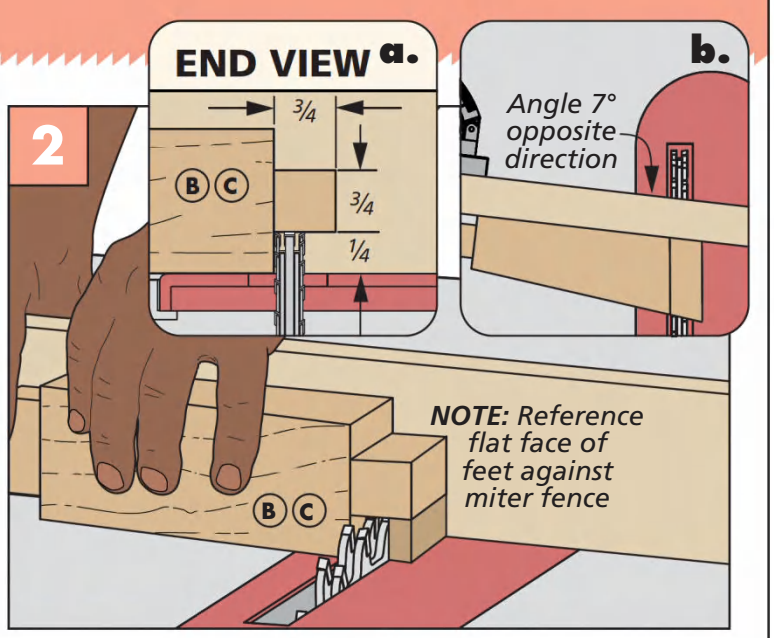

Other Shoulder. Switch the miter gauge into the opposite miter slot, and reset the angle. Keep the flat face of the feet against the miter fence.

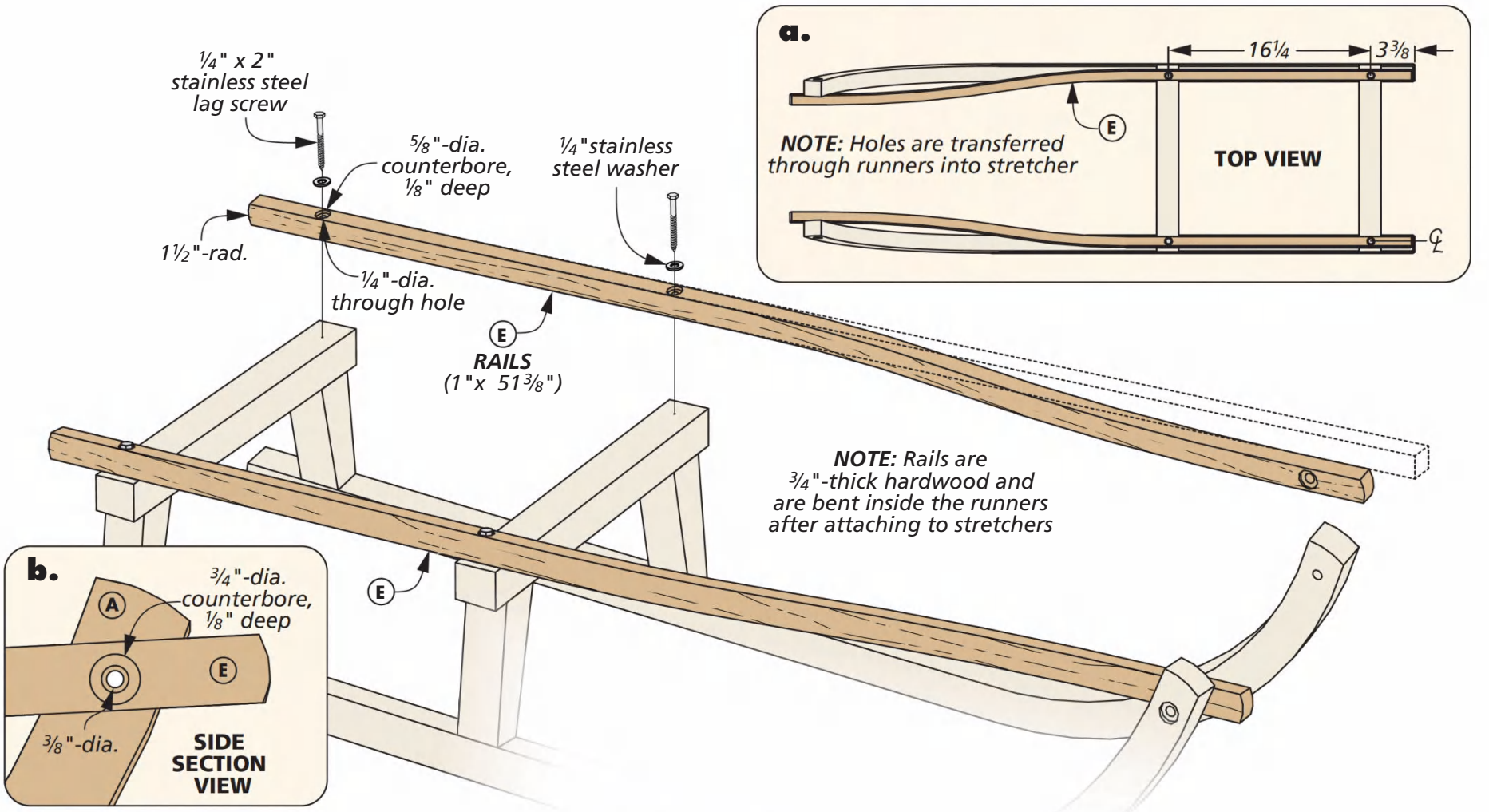

swipes of a hand plane will remove any blade marks.

STRETCHERS NEXT. The rails that connect the feet are pretty straightforward. Start with a piece of stock and form the mortises on the bottom of each. If you've obtained some semi-wet wood for ths project, you'll find that it works easily. It's a great opportuniety to break out a mortise chisel, and chop the mortises out. However, you can just as easily drill out the mortises and square everything up later. Finally, before gluing the feet into the stretcher, you'll want to bevel the top edge. You'll notice in the drawing that this is a shallow, 3° bevel. Cut it at the table saw if you must. Otherwise, a few swipes with a hand plane and you'll be ready to glue the legs into the stretchers.

RAILS. To add some rigidity to the sled and keep the runners from flexing, a pair of long rails run from the rear stretcher to the front of each runner. These are simply cut to size and a radius sanded on the end. A pair of stainless screws and washers attach them to the stretchers.

MORTISED & BEVELED STRETCHERS

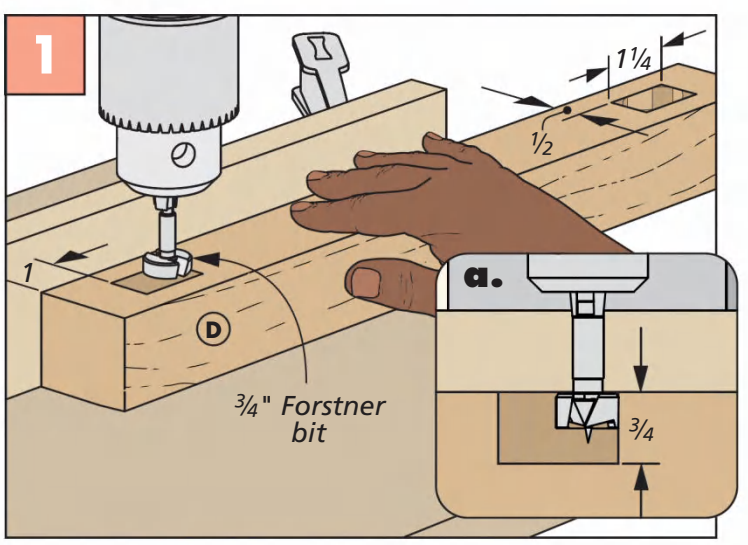

Drill & Chop. Drill the waste out for the mortises using a Forstner bit. After drilling, clean up the mortises with a chisel.

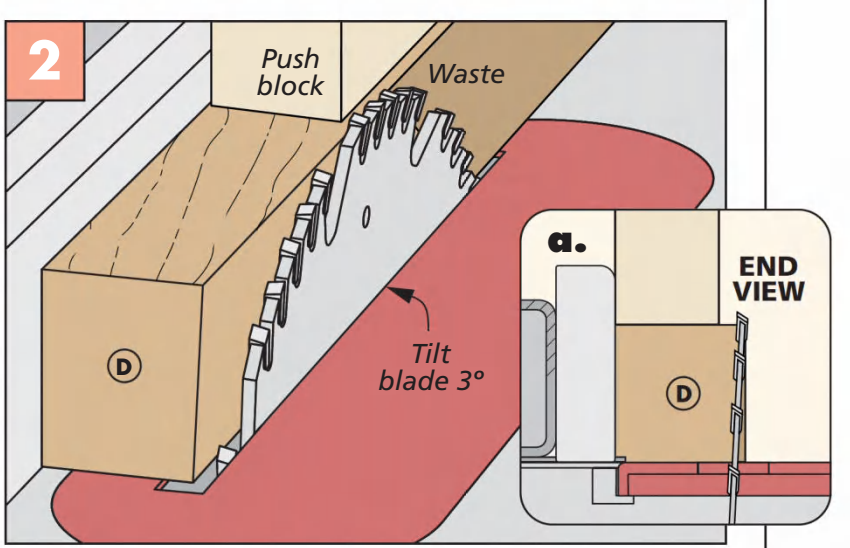

Bevel Stretchers. Cut a shallow bevel on the top of the stretchers. If you enjoy handwork, a hand plane takes care of this quickly.

SHAPING THE ROD

Protect Threads. Use a series of painter's tape wraps to protect the threads of the rod during bending.

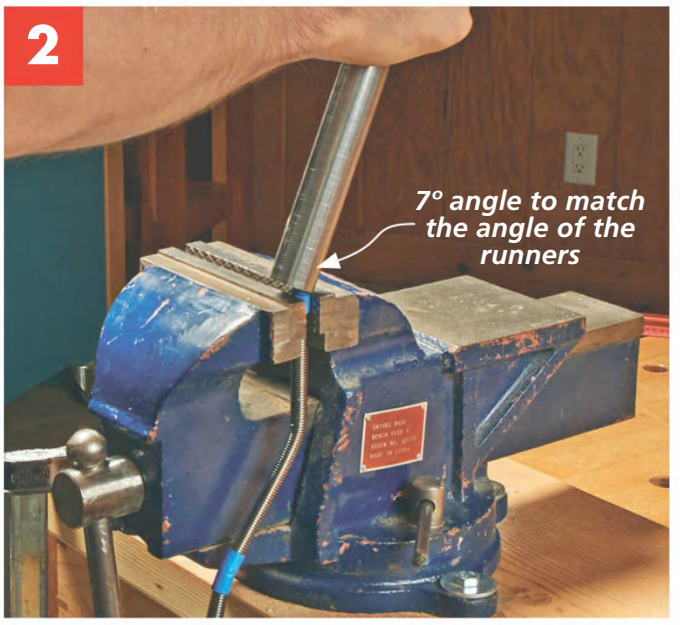

Leverage. A pipe aids in creating the bends, as it increases leverage. If necessary, use a propane torch to heat the rod before bending.

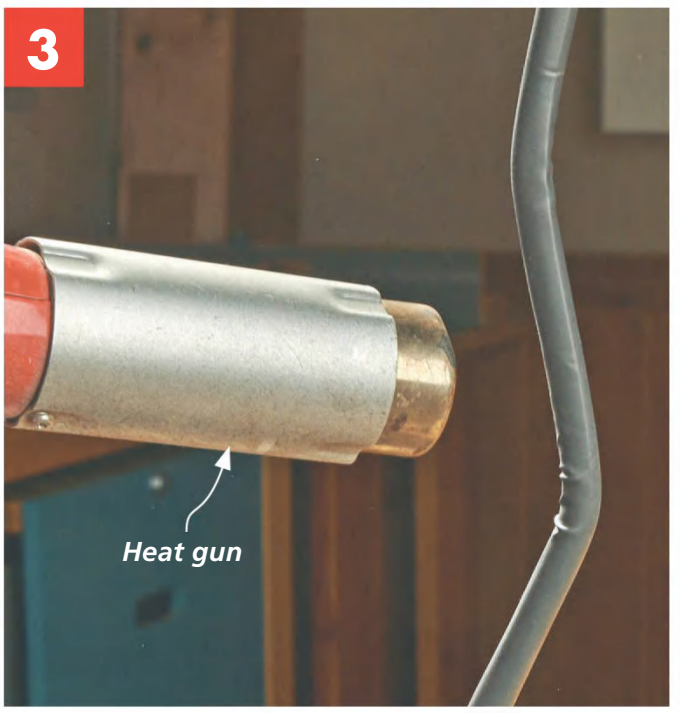

Clean Look. A tube of heat-shrink over the center portion of the rod will protect riders from the abrasive threads.

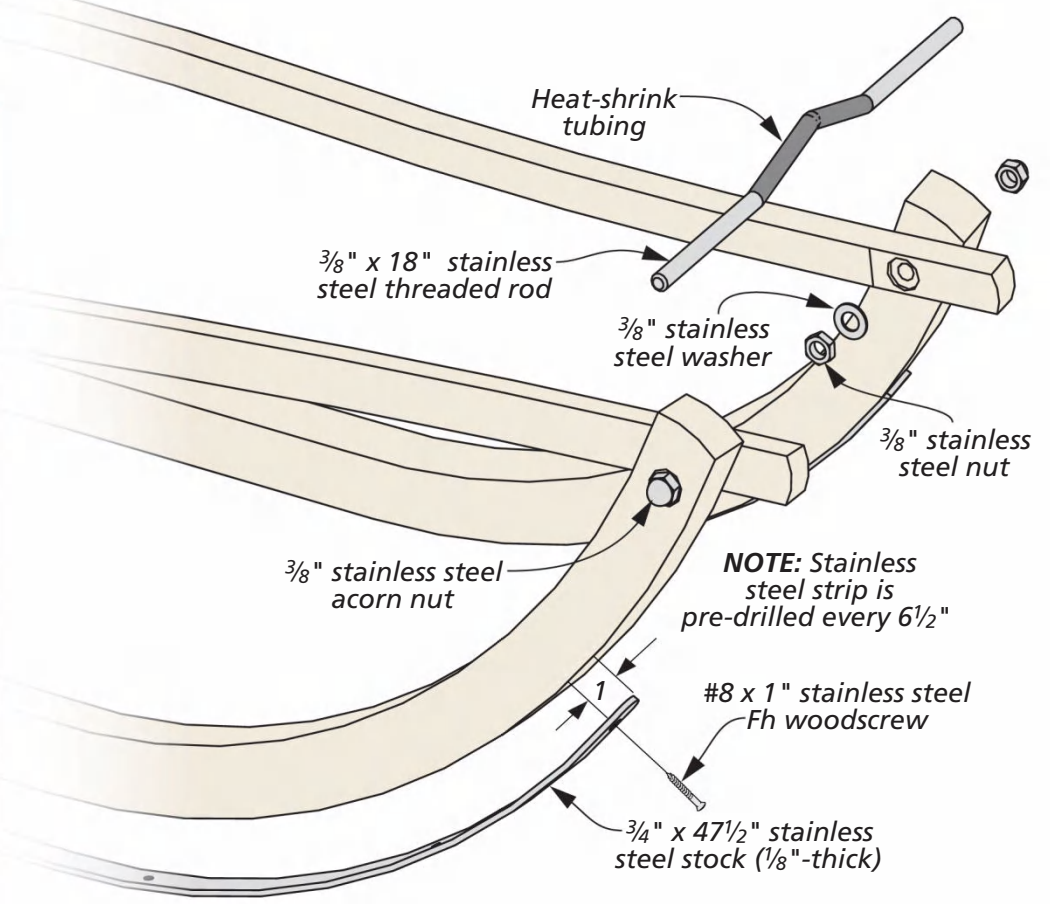

Hardware, ASSEMBLY & WEBBING

Now that the woodworking is out of the way, it's time to do some metalworking and weaving to create a seat.

A LITTLE METALWORKING. The final pieces to make are a few metal parts of the sled. The first is a connector rod that holds the front of the runners in place, and ties the stretchers to the inside of the runners. This can be made from a piece of stainless steel threaded rod. The rod has a few bends in it to fit through the holes. The bends will match the angle that the runners sit at now that you've assembled the sled.

As you can see in the photos at left, the rod is easily bent in a vise. A note of caution here. Most threaded rod is hardened to some degree, so if you bend it too hard, it can snap. Heating up the threaded rod with a propane or MAPP gas torch will help it bend a little easier. While you're making the bends, use a piece of painter's tape to protect the threads from the vise jaws. Then, use a pipe for extra leverage and bend the rod to shape.

With the shaping done, cut the rod slighltly wider than the runner. As a layer of protection, the middle section of rod gets a wrap of heat-shrink tubing, as you see in Photo 3.

PUT IT ALL TOGETHER. At this point, let's get the entirety of the parts together. The stretchers get mounted to the rails with a pair of lag screws, as shown on the previous page. Hold them in place with a pair of clamps and drill the screw locations, along with a counterbore. Then, drive the screws into place.

After the stretchers are attached to the rails, you can use a little force to bend them to the inside of the runners. Use a clamp under the rail to hold it in place. Now, use the hole in the runner as a guide to drill through the stretcher. Feed the connecting rod into place. One end should slip through the runner assembly far enough to let the other side fall in place. Then, it's a simple matter of attaching it with the acorn nuts and removing the clamps.

A LITTLE EXTRA SPEED. Finally, to add a little extra "oomph" and longevity to the sled, a pair of stainless steel strips are added to the bottom of the runners. These are attached with

stainless steel screws, recessed in countersunk holes. Like bending the runners on the form, start by attaching the steel to the straight section of the runner, bending it to follow the contour. Pre-drill and counterbore the steel, then use a self-centering bit to pre-drill the runners.Then, attach the steel to the runner with screws.

A PLACE TO SIT. Here's the final decisions on your part — what do you want the seat to be, and what finish do you want? As far as finish goes, I'd suggest a good spar-varnish for weather resistances. When it comes to the seat, you can see that we went with a webbed nylon seat. This style of seat is easy to do. The webbing is tacked to the inside of the frame with a handful of webbing nails (these can be hammered in, or pressed with a clamp). Then, the webbing strip is wrapped around the frame and stretched taut. Web stretching tools are inexpensive, available online, and work great for this. It's a worthwhile investment for getting a taut weave. After all the strips in one direction are attached, simply add the ones from the other direction, weaving in and out.

If you don't want to try your hand at the webbing, you could always add a slat seat to the sled. This could be a great option if you are planning on using the sled to haul cargo. I can picture myself loading up my ice fishing gear on it and easily pull everything.

Of course, this begs the question: How do you ride it? Well, you have a few options. The first is to place your feet on the threaded rod cross member. The more traditional way is to sit on it and put your feet on the outside of the rails. Your feet will naturally find their way to sit on the runners. Then, you can use your feet to slow yourself down as you're sledding. However you ride it, don't forget the obligatory grin as you're screaming down the hill. W

A pull rope can be made using aluminum cable crimps and rope available at hardware stores.

The stainless runners will not only add speed to the sled, but increased life of the runners.

A WEBBED SEAT

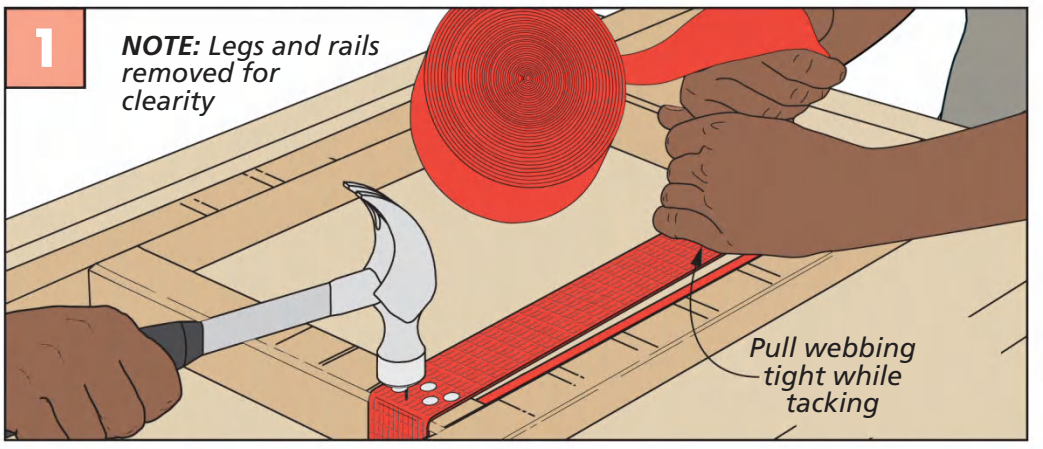

Tacks. With a set of helping hands, tack one end of the webbing, and pull it taut. Then, nail in the other end before cutting away the excess.

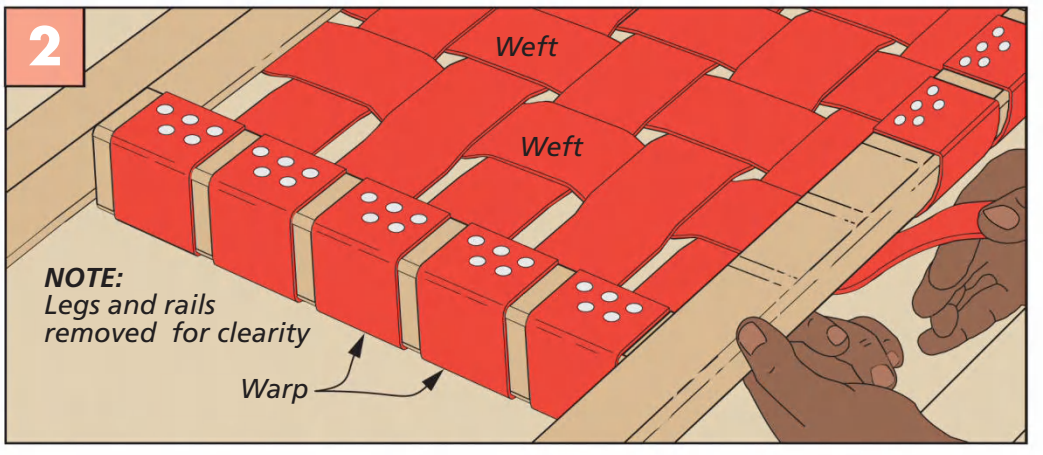

Weave. After completing one direction, create the weft. This is the weaved pattern of the seat. Nail it in place as you go.

Materials & Supplies

A	Runners (2)	1¼ x 1½ - 60 rgh.
B	Front Feet (2)	1¾ x 1¾ - 7 1/16
C	Back Feet (2)	1¾ x 1¾ - 6 3/16
D	Stretchers (2)	1½ x 1¾ - 15
E	Rails (2)	¾ x 1 - 51¾

- (4) ¼" x 2" SS. Lag Screws w/ Washers
- (1) ⅜" x 18" Stainless Steel Threaded Rod
- (2) ⅜" SS. washers, Nuts & Acorn Nuts
- (2) ¾" x 48" Stainless Steel Stock, ⅛" thick
- (16) #8 x 1" Stainless Steel Screws
- (1) Roll of 2"-wide Nylon Webbing w/ Tacks

Flammable Storage Cabinet

Customizable and wall mounted, this storage cabinet helps keep your shop organized and your finishing supplies safe

We all know the dangers within our shops. While work in the shop should be fun and relaxing, it's not a place to be careless. We know to use fences and push blocks, to roll up our sleeves, to wear eye and ear protection, and the list goes on. But one area where my attention to safety often falls short is with my finishing supplies. While there are no sharp blades or motors to worry about, flammable liquids like stains and sealants present dangers all their own. This cabinet was made to meet the requirements of the National Fire Protection Association for a wooden flammables storage cabinet, using exterior-grade plywood, flame-retardant paint, and lipped reservoirs to prevent spillage. Plus, it's a great way to organize your shop and free up some precious surface space.

The design shown here specifies one aerosol rack on the left and one shelf on the right, but don't feel bogged down by specifics if there's something else you need. Want more space for cans? No problem, just mirror the left interior parts over on the right. If you'd like more shelving, do the reverse. The interior parts of this cabinet are easy to change when building, depending on your shop needs.

▲ Latches hold the door of this cabinet in place when closed. Chains support the door when open, providing the perfect place for mixing your favorite finish.

▲ The cabinet is built with 1" thick exterior-grade plywood and coated with flame retardant paint. It's designed to shield your flammables in case of fire, allowing time for you to escape.

Written by: Rob Petrie, Project Design; Dillon Baker

Illustrator: Bob Zimmerman

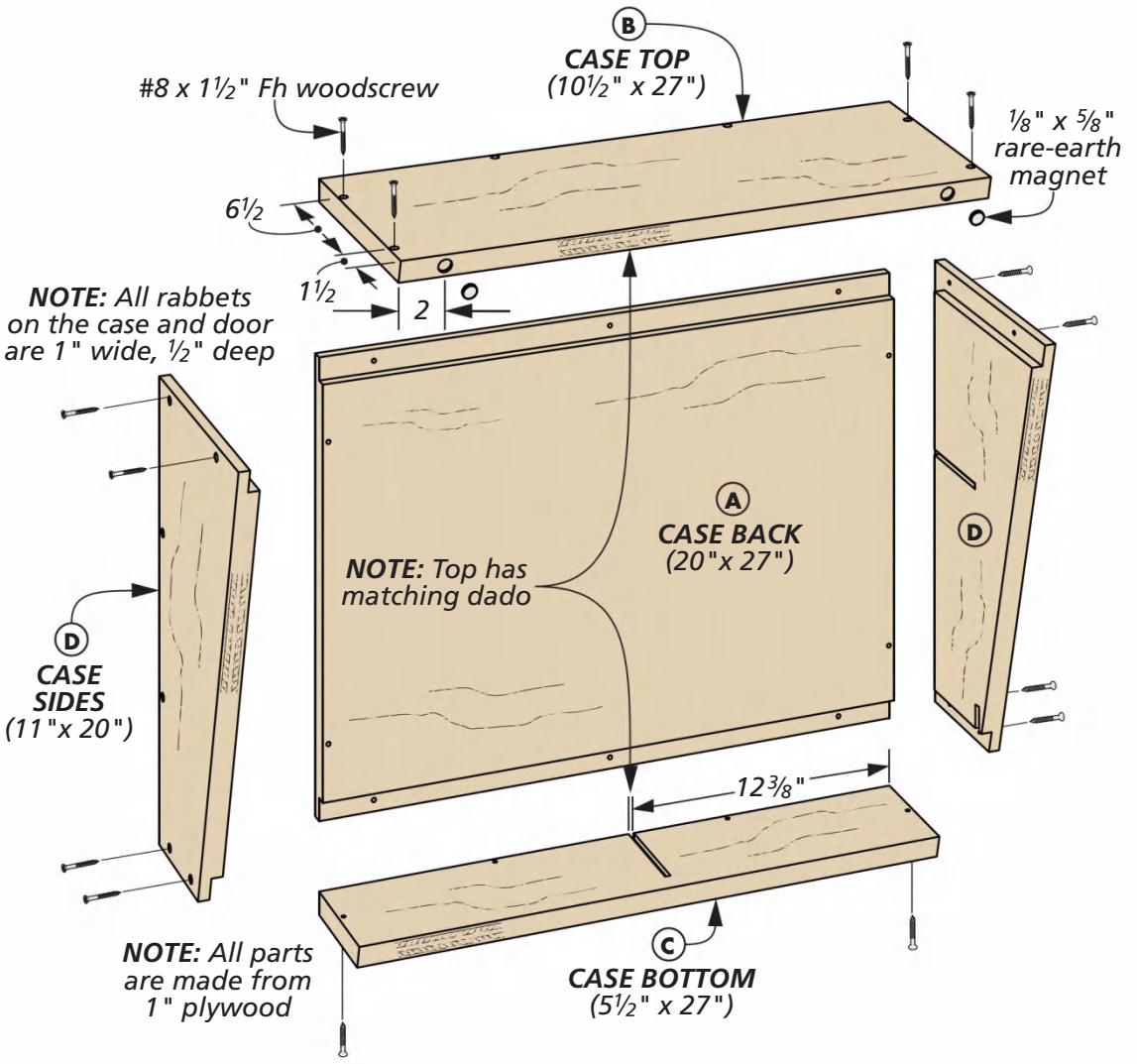

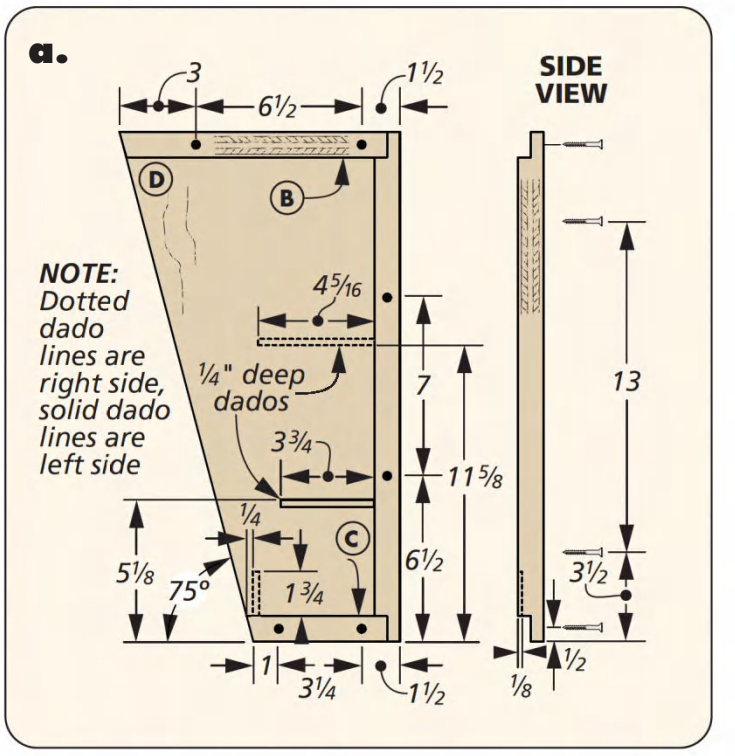

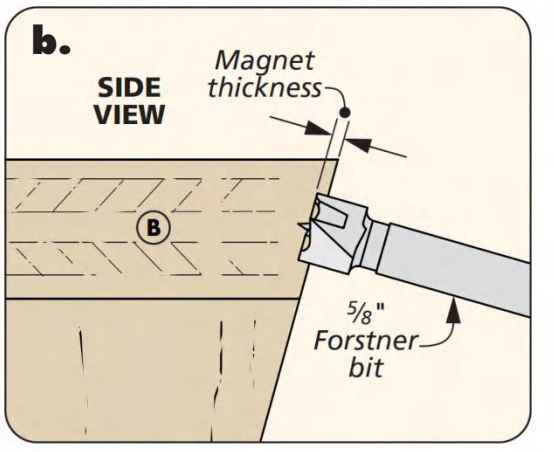

Build the CASE

To begin the storage cabinet, start with the case. All the pieces of the case will be joined together with rabbet joints and wood-screws. Five pieces make up the case: the top and bottom, the two sides, and the back.

BACK. The back will have two rabbet joints for the top and bottom pieces to fit into. To cut the rabbets, I used a ¾" dado blade. With the amount of material being taken off, you'll need to take two passes when cutting these wide rabbets (Figures 1 and 2 below).

TOP & BOTTOM. There are no rabbets to be cut in the top and bottom, but there is a stopped dado in each piece to hold the center divider, as well as a stopped groove in the bottom for the lower shelf lip. I used a stopped-dado jig (shown on the next page) to cut the dadoes for the center divider, but I chose to cut the stopped groove on the router table.

To get stopped grooves on the router table, I mark where I want the groove to stop on the workpiece. Here that's 12⅜". Mark the workpiece, then put down a piece of masking tape on the table and mark exactly where your router bit will start and stop cutting. I use a scrap piece to make sure they're correct. When cutting, simply line up the mark on the table with the mark on the workpiece.

After the stop dadoes are in, cut the angled edges. I made the cuts on my tablesaw with the blade at a 75° angle.

Next, drill the holes in the top piece for the rare-earth magnets (detail 'b'). Set the bottom piece

WIDE RABBETS

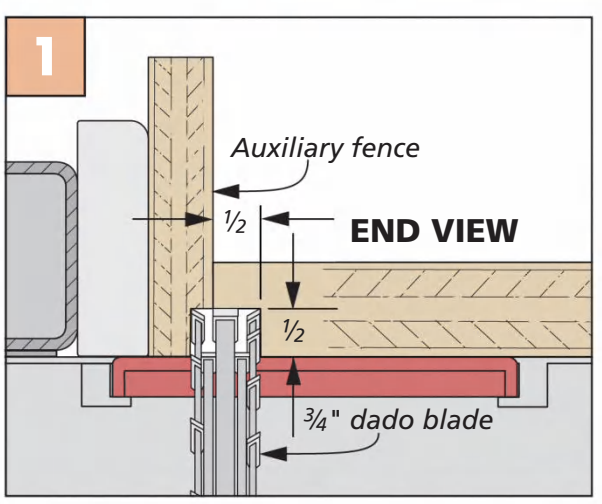

First Cut. To make the wide rabbet, first mark out and cut half the rabbet using an auxiliary fence.

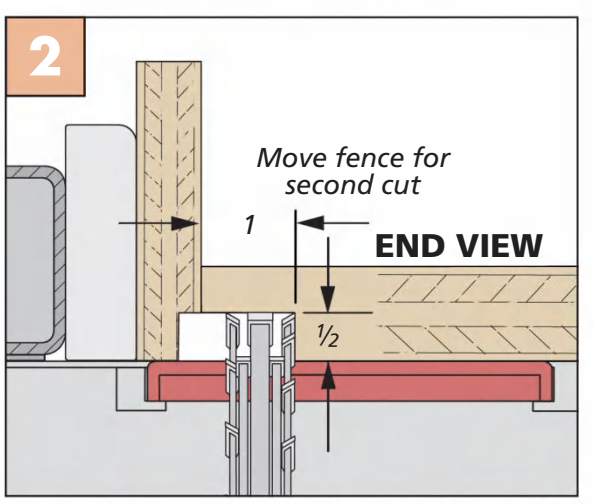

Second Cut. Mark out the rest of the rabbet joint, then move the fence to make the second cut.

aside and clamp the top piece to your workbench. Use a hand drill to make two shallow holes.

SIDES. Last for the case are the sides. Three edges will need to be cut with rabbets for the top, bottom, and back, using the same method as you did for the back piece. After you've cut the rabbets, cut the stopped dadoes in both pieces. In these plans, the right side will have a stopped dado for the shelf and a stopped groove for the lower lip, while the left side will have one dado for the aerosol can rack. Again, I used the jig below for the dadoes and cut the groove on the router table, except this time the groove only needs to be 1¾" past the rabbet.

To fit the door later on, the sides need to be cut at an angle. I simply drew a line between the final lengths of either end and made the cut on the bandsaw.

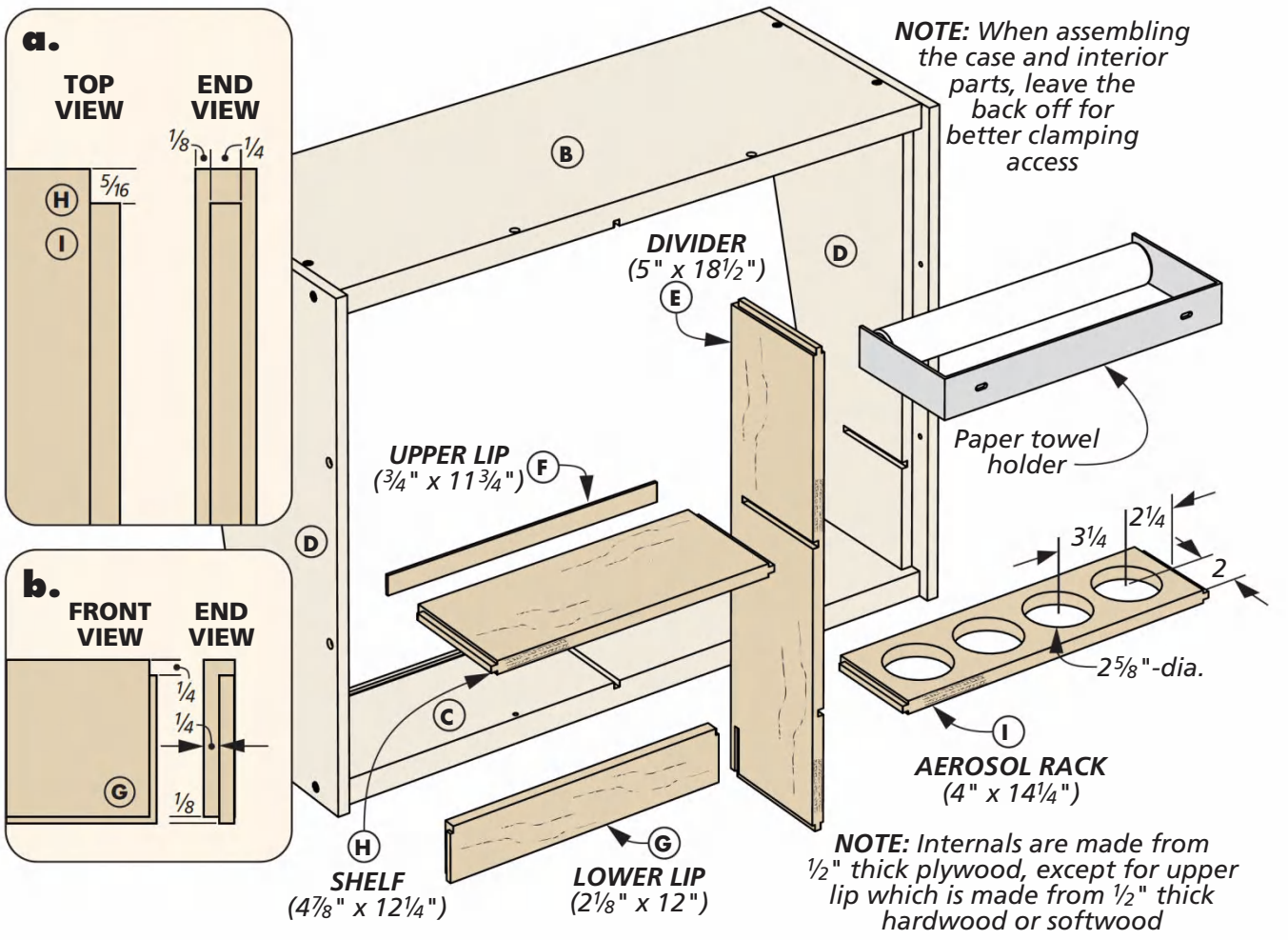

DIVIDE UP THE INTERIOR

There are five parts needed to divide up the interior of the cabinet: the center divider, the aerosol can rack, the right shelf, the top lip, and the bottom lip. Once all the internal parts are cut to size, set the top lip aside. Move on to the divider. Cut the tongues on either end to fit into the stopped dadoes on the top and bottom of the case. Next, cut the stopped dadoes to match the side pieces of the case, as well as the smaller stopped groove for the lower lip. The dadoes can be cut with the jig, while the groove should be cut on the router table.

For the lower lip, cut three rabbets to fit the case and divider. For the shelf, cut a tongue on each end to match the dadoes in the divider and side.

Lastly, you'll need to cut tongues into the ends of the aerosol rack, just as you did with the shelf. Before you make the tongues though, cut the holes for the cans. I found a circle cutter to be the best choice here.

MAKING THE STOPPED DADOES

Stopped Dado Jig. This jig is built with two pieces of plywood for the base connected by spacer blocks, just wide enough for the guide bushing to fit through. A guide block below keeps the jig against the workpiece. To use the jig, measure out how far your dado needs to go. Position the jig against your workpiece and clamp it in place. Run the router through to the end of the dado. You'll make the cut with a ¼" straight bit, and you'll also need a ⅜" guide bushing (detail 'a') to prevent you from cutting into the jig.

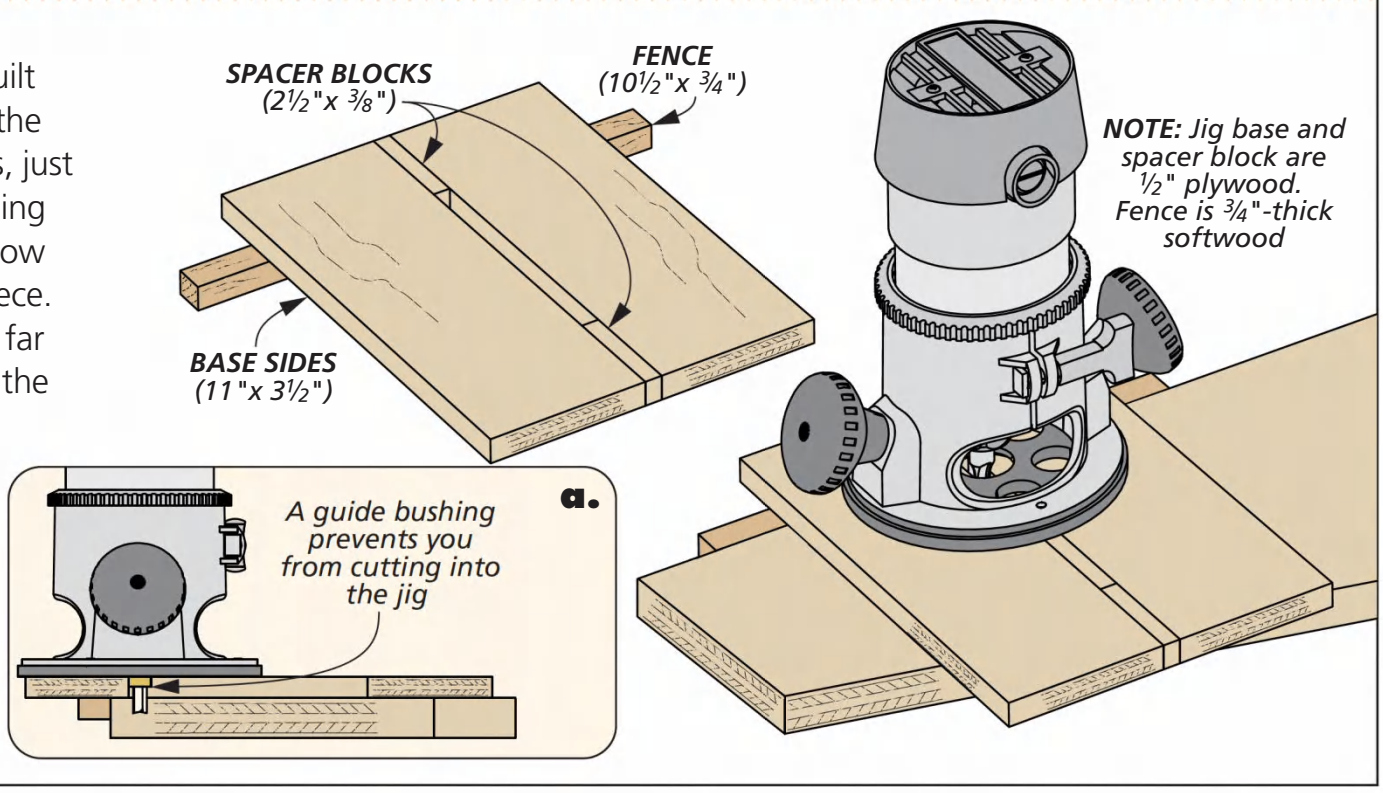

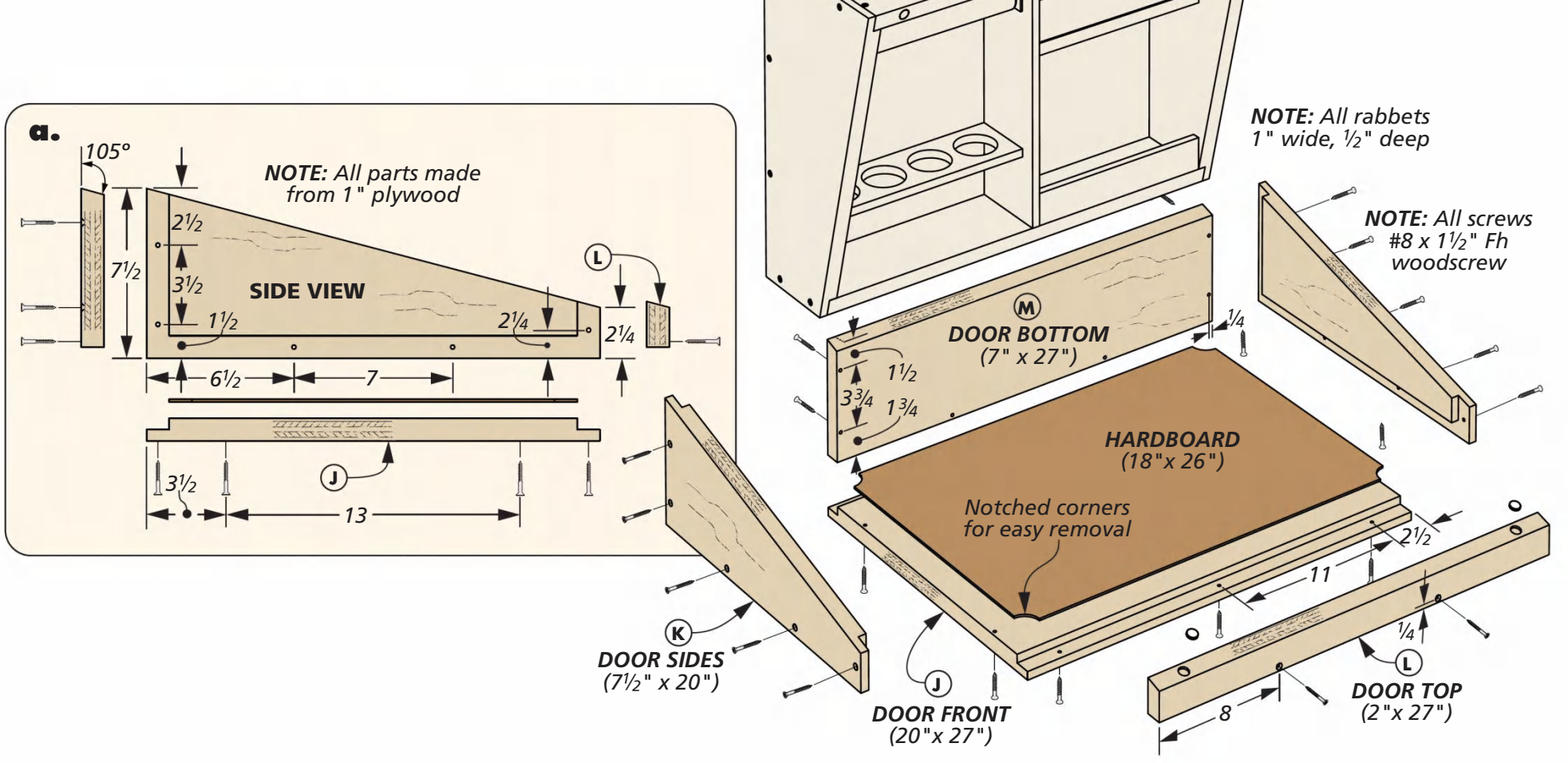

Building the Door & Final **ASSEMBLY**

At this point, building the door is easy, as it's just a shallower version of our case. The door is made of two sides, a top, a bottom, and a front.

Start with the door front, making it identical to the case back, with rabbets on the top and bottom. The sides of the door are similar to the case sides, made by cutting rabbets on three edges to accept the other door pieces, then making the angled cuts to match the case sides.

Coming to the top and bottom of the door, once the pieces are cut to size, cut the angled ends as well to fit against the top and bottom of the case. Finally, take the top piece and drill in the holes for the rare-earth magnets on the angled edge.

PUTTING IT ALL TOGETHER. To start assembly, begin with the case, putting together the sides, top, bottom, and interior parts, but leaving the back off. The interior parts will help keep all the case pieces squared up while you're putting them together. Glue the tongues in, then glue the rabbet joints and secure them with screws. The upper lip is light enough that just a bit of glue will hold it on once dry. Leaving the back off for now will give you some extra room to manuever your clamps. When all the pieces have dried, glue and screw on the back of the case.

The door is assembled in a similar fashion. Glue the rabbet joints together and screw them in place. While clamps aren't necessary here, clamping the door together can be a big help.

Be sure to have warm water and rags on hand when gluing. There's bound to be some squeeze-out once everything's been screwed together.

FINDING THE FIT. You may find the fit between the case and the door isn't perfect. If there's gaps in between when you put them together, then find a large surface and some self-adhesive sandpaper. By sanding the edges all at once (box to the left), you should be able to get a flush fit between the two.

FINISHING. To finish, first seal up the cabinet. A little caulking in the interior seams prevents any spilled liquids from seeping out over time, and it'll give the cabinet a "seamless" look. Then paint the interior and exterior of the cabinet with flame retardant paint. Once the paint dries, fit the rare-earth magnets into their holes with a bit of epoxy.

Next, install the hardware by following the steps in the

MAKE IT FLAT & FLUSH

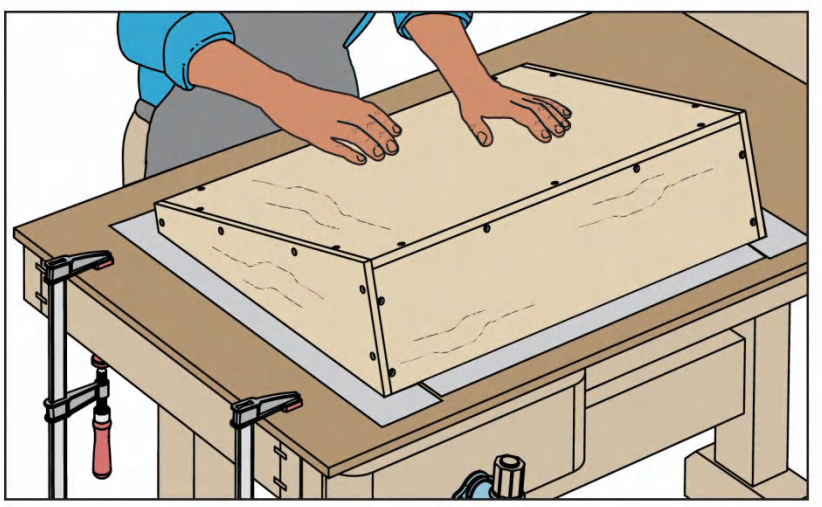

Sand It! Make sure the cabinet closes tight before hinging the door and case together. Apply self-adhesive sandpaper to a large, flat surface. Lay the cabinet case face down and move it steadily back and forth on the sandpaper. Do the same with the cabinet door, testing the fit between the two until they fit flush.

FINAL TOUCHES

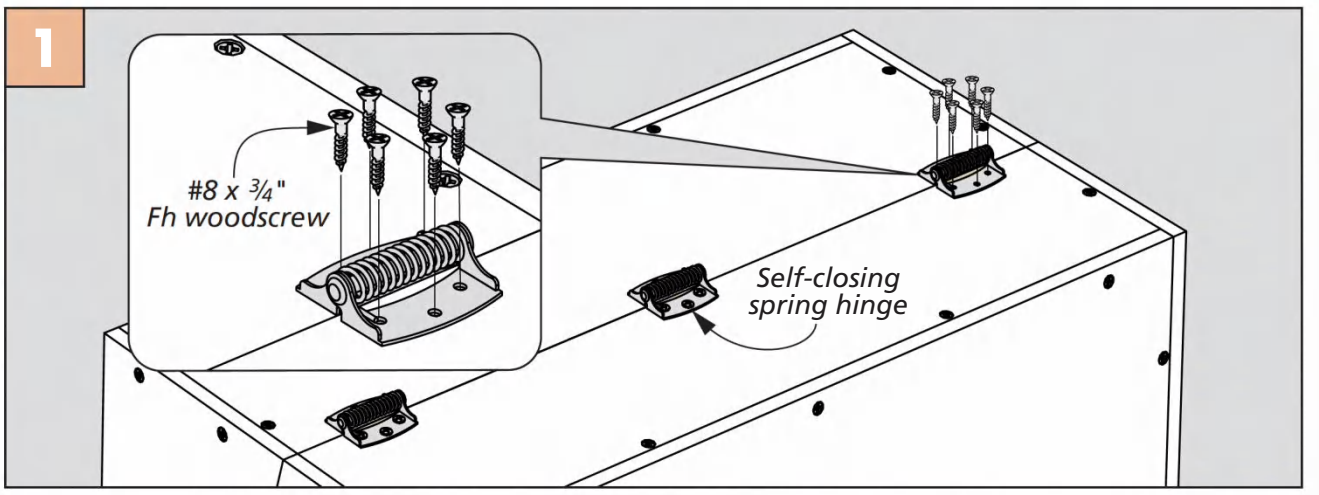

Add the Hinges. Screw the hinges into the bottom of the cabinet, where the case and door meet. The case is made to be used as a worksurface when open. Clamping the door and case together while installing the hinges helps keep the two even.

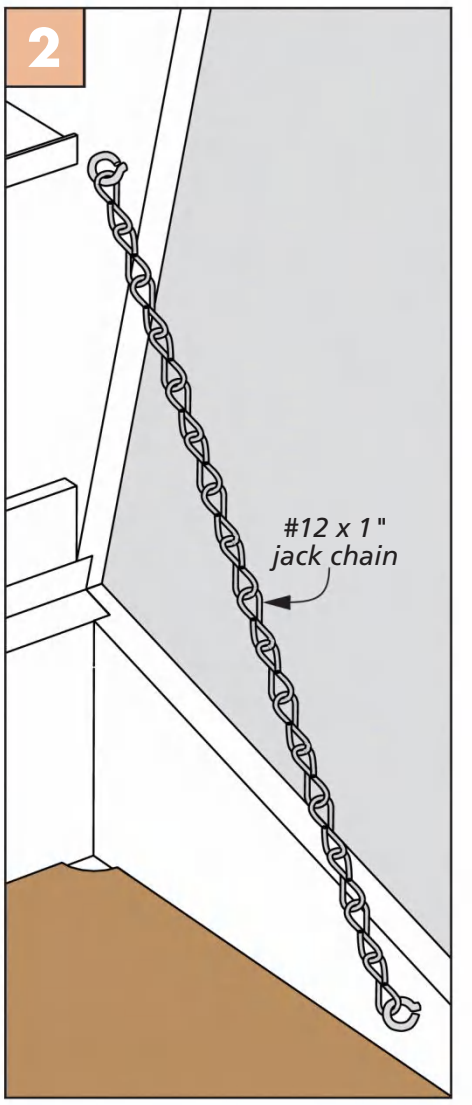

Chain Supports. Threaded eyelets make it simple to install the chain. Just drill the pilot holes and screw them in.

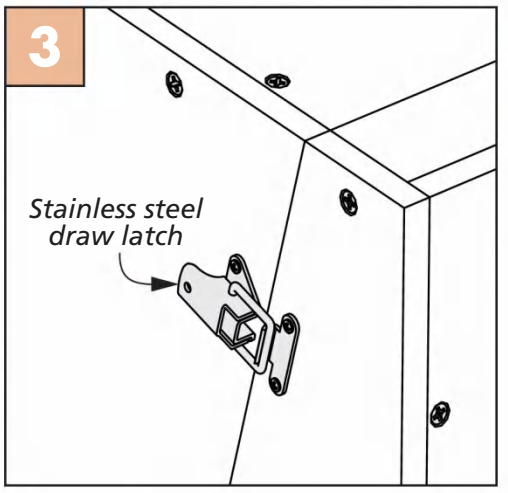

Latches. Latches on the sides of the door and case help hold the heavy door closed.

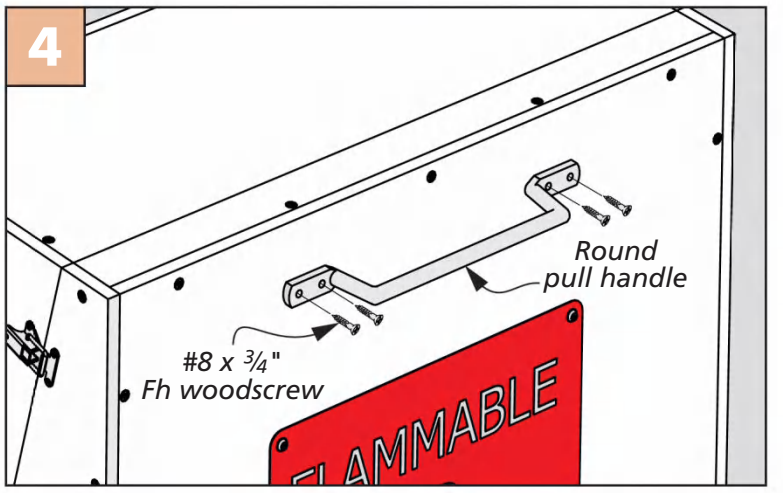

Handle. Screw the handle to the front of the door. The inch-thick plywood has some heft, but the pull makes opening and closing the cabinet easy.

boxes above. To make the support chains (step 2), measure the length of jack chain needed for the door to hang level when open and mark the placement for the eyelets inside. Drill pilot holes for the eyelets and thread them in. Use pliers to open the chain links, then bend the end links of the length back around the eyelets.

Use a bandsaw to form the notched corners on the hardboard liner. This lets you pull up the hardboard easily if there's a spill and replace it with another piece. Of course, your cabinet wouldn't be complete without a big, red "Flammable" sign. Once it's screwed on, your storage cabinet's finished. W

Materials & Supplies

A	Case Back (1)	1 ply. - 20 x 27
B	Case Top (1)	1 ply. - 10½ x 27
C	Case Bottom (1)	1 ply. - 5½ x 27
D	Case Sides (2)	1 ply. - 11 x 20
E	Divider (1)	½ ply. - 5 x 18½
F	Upper Lip (1)	⅛ ply. - ¾ x 11¾
G	Lower Lip (1)	½ ply. - 2⅛ x 12
H	Shelf (1)	½ ply. - 4⅞ x 12¼
I	Aerosol Rack (1)	½ ply. - 4 x 14¼
J	Door Front (1)	1 ply. - 20 x 27
K	Door Sides (2)	1 ply. - 7½ x 20
L	Door Top (1)	1 ply - 2 x 27
M	Door Bottom (1)	1 ply. - 7 x 27

- ¼" Pressed Hardboard
- (4) ⅝" Rare-Earth Magnets
- (60) #8 1½" Woodscrews
- #12 x 1" Jack Chain (sold by the foot)
- Flame-Retardant Paint
- Flammables/Smoking Control Sign
- Paper Towel Dispenser
- Round Pull Handle
- (2) Stainless Steel Draw Latches
- (3) Self-closing Spring Hinges
- (4) Threaded Eyelets

The case and door are made from a 48" x 96" sheet of 1" thick exterior grade plywood. The internal parts are made from a 24" x 24" sheet of ½" thick plywood.

The angled, tapered legs are up to the task of providing sound support for this bench. Also, the large roundover on the front edge guarantees it's a comfortable resting place.

Written by: Erich Lage; Project Design: Chris Fitch

Illustrations: Dirk Ver Steeg

Mid-Century Hall Bench

Most hall benches live a quiet life of service, which is fine. But as you see here, that service doesn't have to be lived without style.

It seems odd that the term "mid-century modern" didn't exist before the mid-1980s. But that's when it surfaced as the title to a book by Cara Greenberg that covered a lot of the post WWII trends in architecture, furniture, and accessories.

At the heart of this movement was a passion to distill all things to the essence of its function, but not abandon style in the process. "Functionally elegant simplicity" is the ongoing manifesto of the mid-century modern movement.

The secondary goal was affordable, well designed furniture. But, as with the Arts & Crafts period that preceded it, the original pieces from this movement can set you back some serious cash.

That's where we can help out, at least if you're in need of a handsome hall bench. The bench you see here ticks all the boxes when it comes to the standards of the mid-century ethos.

What you don't see, though, is some serious mortise and tenon joinery going on where the seat and legs join. Also unnoticed is the finger-jointed bracket that ties the back to the seat.

It's a fairly long list of diverse materials that are used under the umbrella of the mid-century movement. We chose to stick with one of the favored woods — walnut. It's got a subtle depth and a coolish warm glow that plays well with the clean design. What are you waiting for? Let's dive in.

First, shape the LEGS

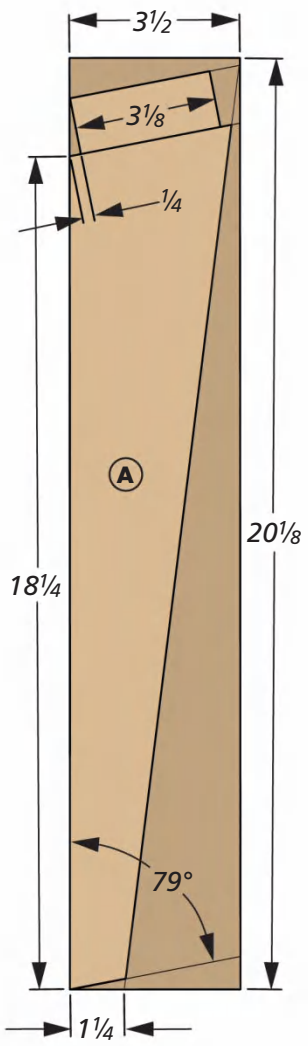

I love it when function and form dance together as they do here. Just take a look at how this leg performs both parts flawlessly. Let's start by examining the tenons at the top.

BIG TENONS. It's a noble cause to aim for sleek, simple designs but you had better make sure your joinery is capable of carrying the load. The tenons you see at the top of the legs in the main drawing are up to the task.

First, they're almost as tall as the seat is thick. And look at how thick and wide the tenon is (detail 'a'). Then throw into the mix all the love and support the shoulders are providing. It's a slick trick that all this function is mostly happening out of sight under the seat.

TAPERS. Form says, "But wait, there's more!" And with one stroke adds the taper you see in the detail to the left. This lightens the visual load as the legs come into view and makes them seem almost thin when they meet the floor. But at an 1¼" square, the foot is plenty strong.

I'm not sure if this dance would be called a tango, samba, or the watusi, for me dancing is a spectator sport (unless primed with some cold beers). But this strong, sleek leg is a sight to see. Maybe we should make four of them. After laying out the blanks, head to the table saw.

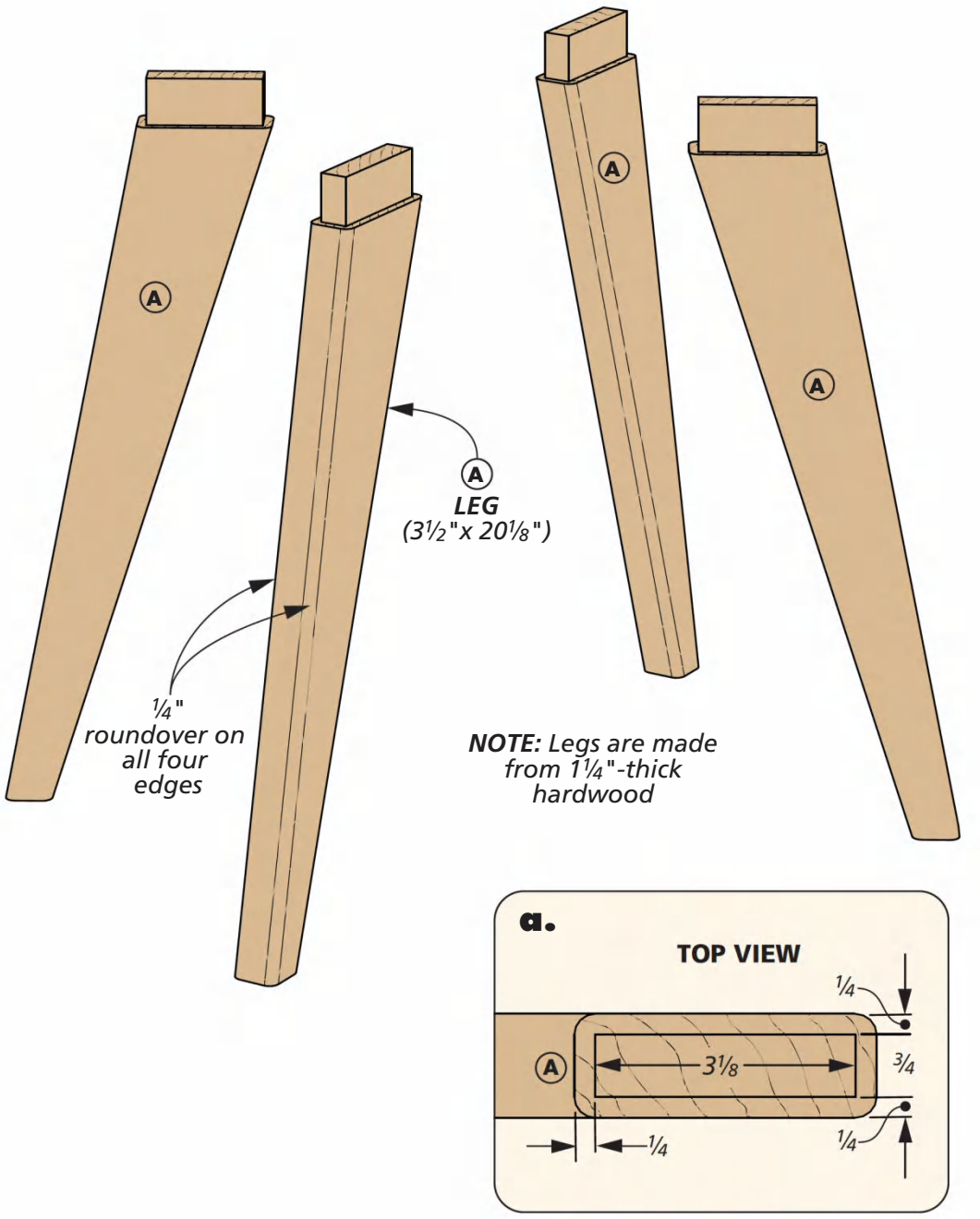

The box below shows how to make the tenons. The short shoulders and leg tapers are done at the bandsaw. Now it's time to make the seat that partners with the legs.

ANGLED TENONS

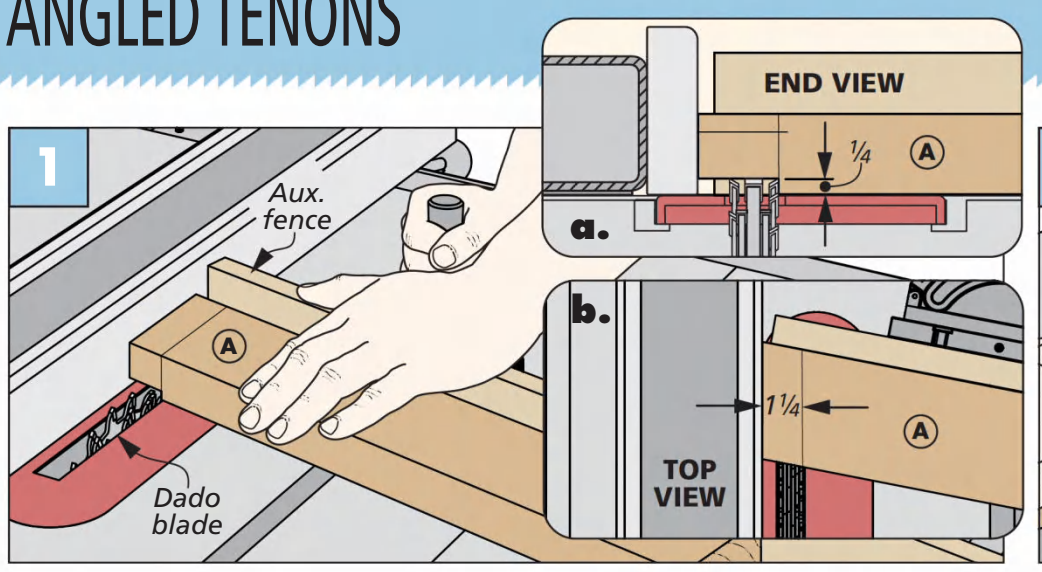

Tenons First. An auxiliary fence attached to your miter gauge that's set at the proper angle is how you create the shoulders for the leg tenons. Nibble away the waste before heading to the bandsaw.

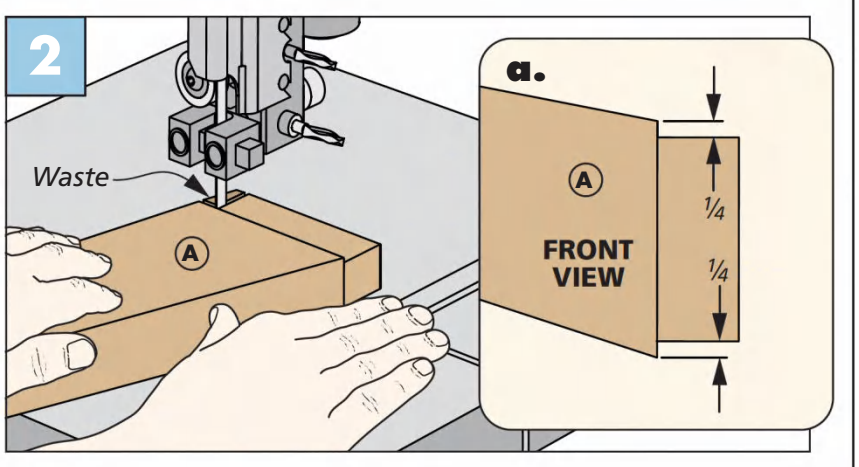

Finish the Shoulders. The bandsaw is the perfect tool for the short shoulders on the tenons. Pare away any rough edges with a sharp chisel.

THE SEAT

The seat is the biggest, thickest, most visual part of the project, so when it comes to wood selection you want the best you can get. I'm talking about cosmetics and structure, it's important that both are on the mark for the seat.

Of course you want it to look good, so a straight grain pattern will help hide the glue joint. But you also want the material flat as possible. A twisted seat means legs that wobble or rock. So unless you want to make some custom walnut shims to slide under the errant leg — make sure the seat is flat.

BEFORE MORTISES. After the seat is glued up and cut square, ease the edges (detail 'b'). Notice the big roundover on the front edge, there are several ways to tackle this. You could justify buying that big router bit since this is such a beautiful project. Or you could rout it with a smaller bit and finish shaping it with hand tools. Either way, when that's done, flip the seat and get after the mortises in the underside.

MORTISES. The mortises shown in detail 'a' above are positioned to help absorb the load evenly. To prevent the front legs from being a tripping hazard, they're set in from the edge.

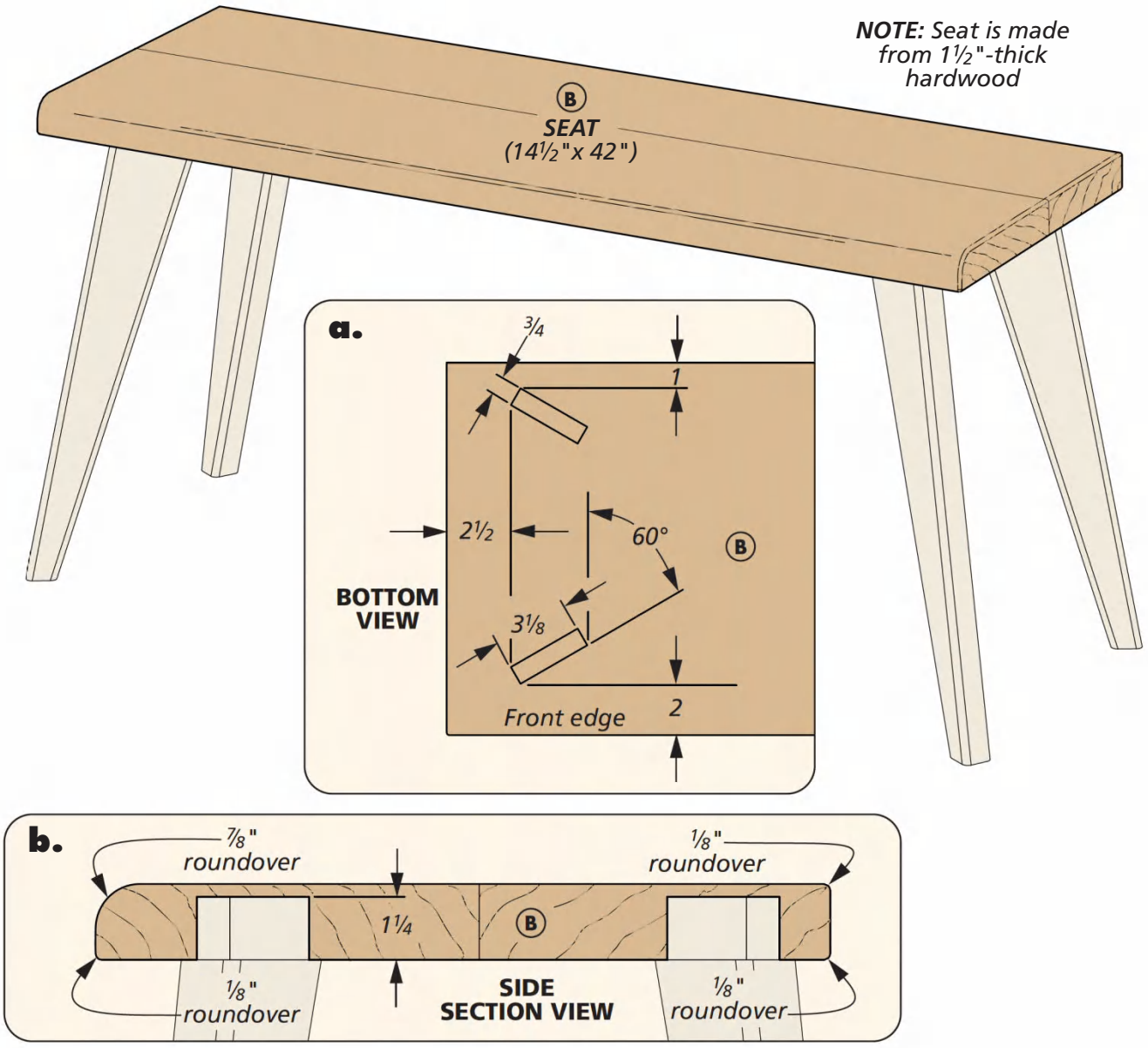

The angled legs do present one problem, there's no easy way to clamp up the legs to the seat, you want the fit of the mortise and tenon to be spot on. The box below addresses making the mortises (Figure 1). And tailoring them to the tenons (Figure 2).

GLUE UP. Like I said, there's no easy way to clamp the legs to the seat, so we resorted to epoxy. Epoxy creates an iron-clad bond that doesn't swell the wood while curing. While that's curing, you can start making the back that ties to the bench.

MORTISES

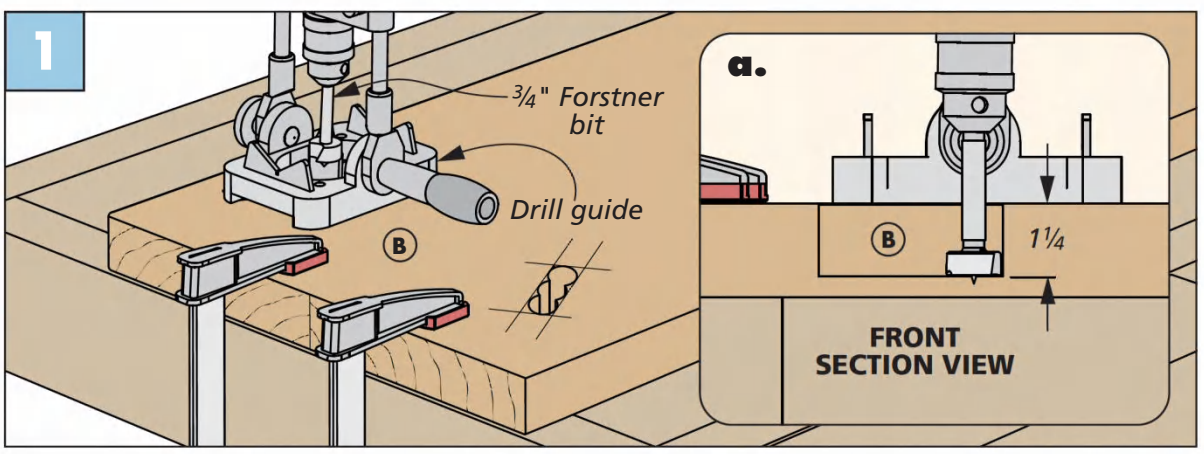

Big Mortises. The mortises for the legs are set at angles on the underside of the seat. After laying out their location, use a Forstner bit to remove most of the waste in each mortise. The drill guide helps you keep the mortises square to the surface.

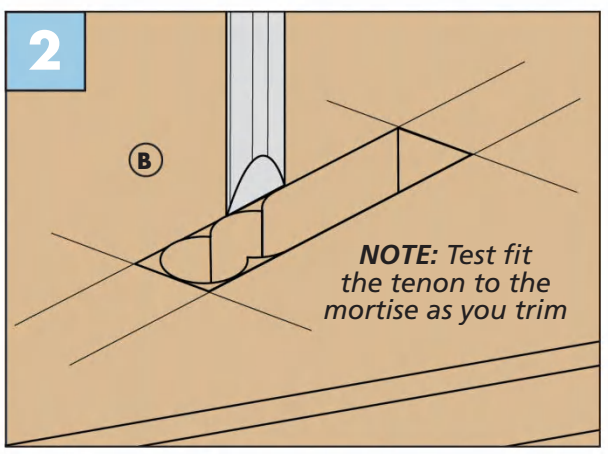

Squaring Up. A sharp chisel and a little elbow grease will yield a mortise that mates well with its tenon.

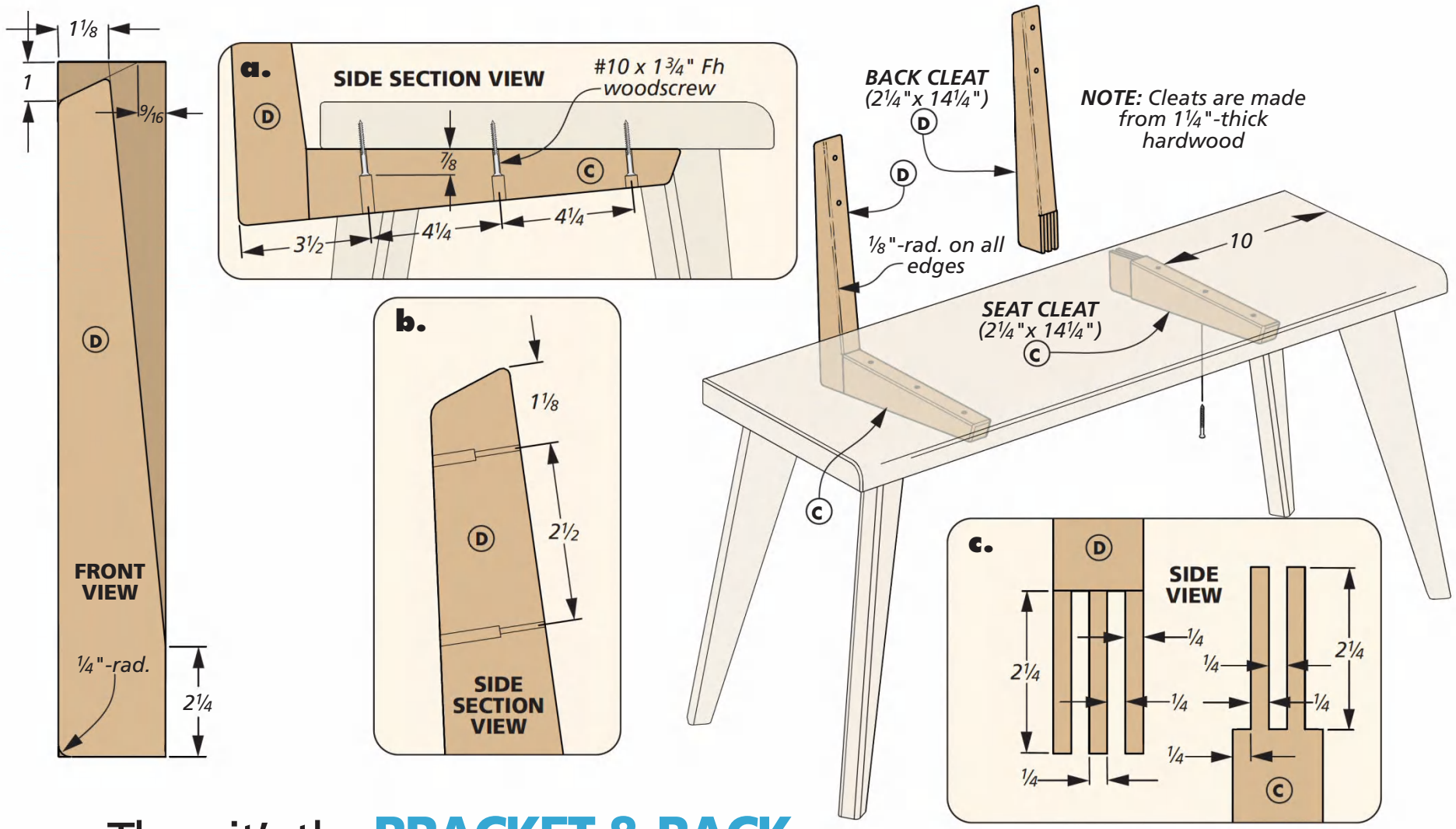

Then it's the BRACKET & BACK

For a full-size template of the bench bracket, go to:
Woodsmith.com/257

You're done with the lower portion of the bench so now you can concentrate on parts that you'll come to lean on: the brackets you see above, and the back that's on the next page.

The brackets are composed of two parts — the seat cleats that attach to the underside of the seat (detail 'a'). And the back cleat that is screwed to the back (detail 'b'). The two cleats are joined together with the long finger joints that you see in detail 'c.'

FINGER JOINTS. Finger joints take longer to make than, lets say, a simple lap joint. But in this case, when you want a really strong joint, it's sort of a no-brainer. The finger joints shown being created in the box below yield four times the glue surface compared to a lap joint. So it's clearly worth the time you're going to invest.

GLUE UP. When you're done at the table saw (Figure 1), move back to the bench and gather the supplies you need to glue the cleats together. You'll need a framing square, several clamps. Along with some warm water and rags for cleaning up, that's the only downside to all this glue surface. You're going to

MAKING A STURDY BRACKET

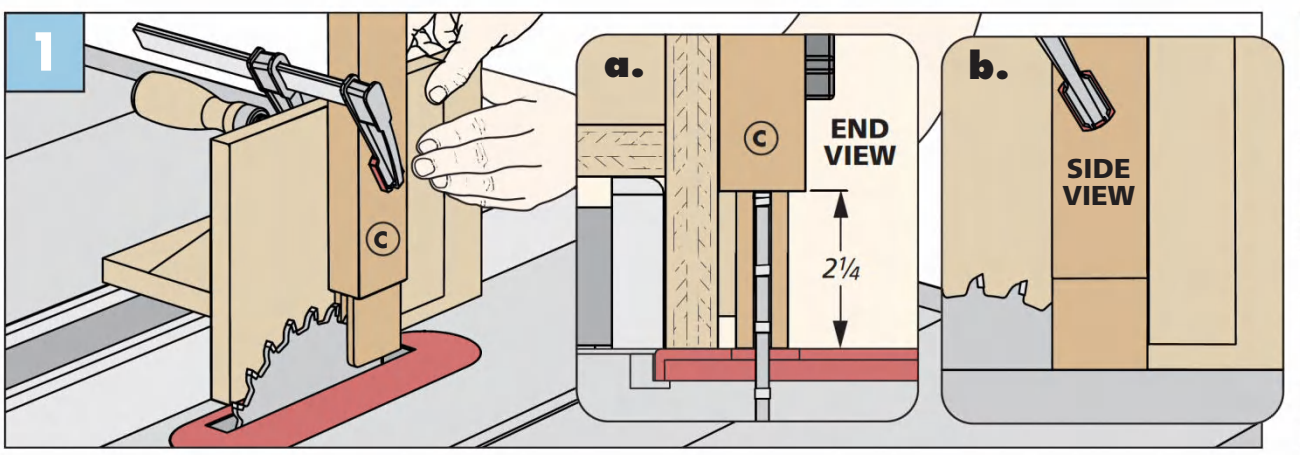

Fingers First. The jig you see here rides on the fence of your table saw and holds the cleats while the finger is being cut. Cut the fingers in the seat cleats first, then trace their location onto the back cleats with a sharp pencil.

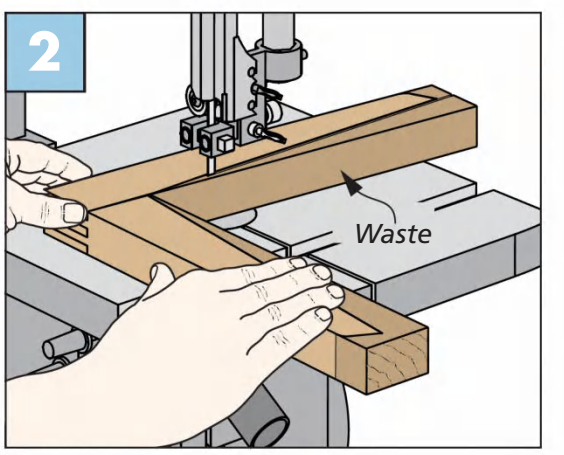

Profile Second. After the cleats are glued together, cut out the profile of the bracket at the bandsaw.

end up with a fair amount of squeezeout that you want to wipe off immediately.

FINISHING THE BRACKETS. Now you can use the full-size template to trace the profile of the bracket on to the glued up cleats. You'll find the template at *Woodsmith.com/257*. With brackets in hand, head back to the band saw and cut out the profile (Figure 2).

After sanding the brackets smooth, attach them to the underside of the seat. To do that you first have to layout and drill the counterbore and shank holes that you see in details 'a' and 'b' on the previous page.

Then, with the seat upside down on the bench, position the brackets and drill the pilot holes. For ease of installation, I always apply a little beeswax to the ends of the screws. Now you're ready to tackle the last part of the bench, the back.

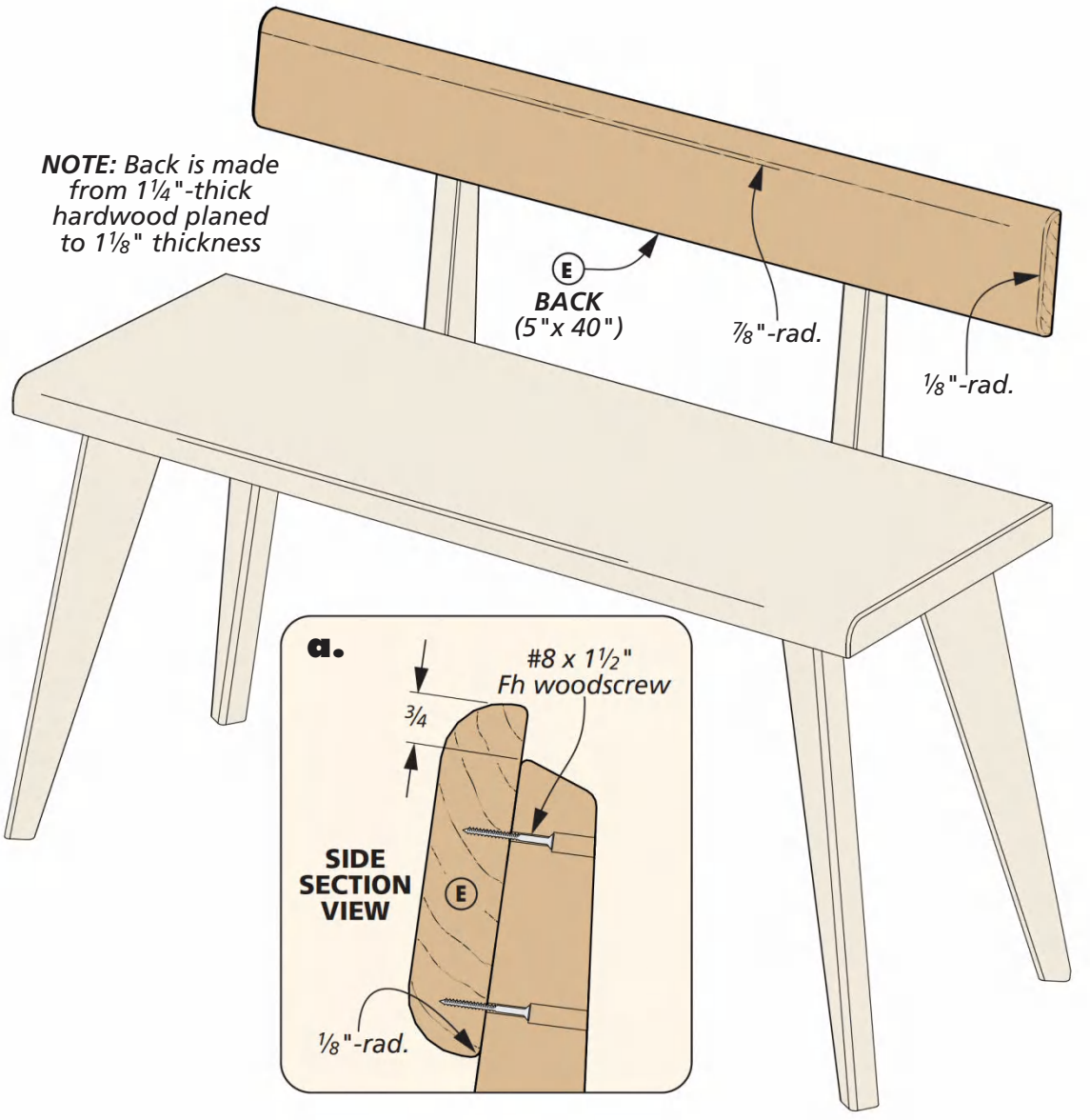

THE BACK

The back that you see in the main drawing on this page is nothing exotic. You'll notice that it's the thinnest piece on this project, but still plenty strong. This is all in the effort to keep the look of the bench as light and simple as possible and still be strong.

But as you see in the cutting diagram below, the back comes out of slightly thicker stock. It's just a matter of spending some time at the planer to make the thinner profile. When the shavings are cleaned up, you need to dress the edges of the back. The top and bottom edge gets the same treatment as the front edge of the seat (detail 'a').

ATTACH THE BACK. A temporary cleat clamped to the brackets supports the back while drilling the pilot holes. Once the back is screwed in place, all that's left is to apply the finish.

Oil and a couple of coats of lacquer protect the bench. With that, the bench is ready to take up residence in the hall, or whatever place your heart desires. W

Materials, Supplies & Cutting Diagram

A	Legs (4)	1¼ x 3½ - 20⅛	**D**	Back Cleats (2)	1¼ x 2¼ - 14¼
B	Seat (1)	1½ x 14½ - 42	**E**	Back (1)	1⅛ x 5 - 40
C	Seat Cleats (2)	1¼ x 2¼ - 14¼	•	(6) #10 x 1¾" Fh Woodscrews	
			•	(4) #8 x 1½" Fh Woodscrews	

1½" x 7½" - 96" Walnut (10.0 Bd. Ft.)

1¼" x 7½" - 60" Walnut (6.3 Bd. Ft.)

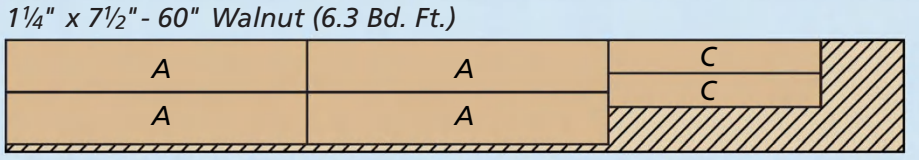

1¼" x 6" - 60" Walnut (3.8 Bd. Ft.)

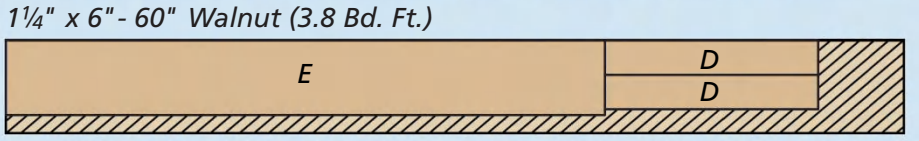

Installing Concealed Hinges

▲ Concealed (European-style) hinges combine a simple installation with after-the-fact adjustability. This will simplify door installation on most projects.

My latest project was a small cabinet built in the Scandinavian modern style. Near the end of the construction, I reached a decision point about the hardware.

The door pulls found themselves. I came across rectangular pulls the matched the proportions of the case. The hinges were harder to settle on.

By nature, I lean more traditional than modern. So butt hinges stayed near the top of the list. However, the sleek design of the cabinet seemed to ask for something less visible. John Doyle, one of the *Woodsmith* designers, fancies concealed or European hinges, like the one shown at left. As you'd guess, the hardware is invisible from the outside. (They are somewhat bulky when the door is open.)

He also promised me that installing the hinges and fitting the doors is a simpler process than mortised-in butt hinges. I bit; he was right.

This style of hinge divides the process of hardware and fitting into separate processes. Build the doors to suit the opening (with appropriate gaps). Then install the hinges. Once in place, you can tweak the door position easily.

Written by: Phil Huber

INSTALLING THE HINGE

When installing concealed hinges, I prefer to start with the door. This way, the hinges will serve as a gauge to help you locate the mounting plates in the cabinet. There's no harm in working the other way around, though. Kind of like pins-first or tails-first dovetails.

DID YOU READ THE INSTRUCTIONS? Concealed hinges usually come with a set of installation instructions. If your experience with concealed hinges is limited, it's a good idea to give them a quick read-through — I'll wait.

Another good idea: check the manufacturer's website for any updates. On a recent project, I found that the instructions had an error. I was able to print an update from the web.

UP & DOWN. The vertical location of the hinge is entirely up to you. My recommendation is to pick a nice round number and use that for the centerpoint of the hinge anytime you work with concealed hinges. For me, it's 3". Keep in mind that the farther apart the hinges are, the more stable the assembly.

SETBACK REQUIREMENTS. The amount the hinge cup hole is inset from the edge of the door depends on the hinge and application. The dimension is listed either to the centerpoint of the hole or from the edge of the hole (again, instructions). Centerpoints just work better in my head, so I'll do a little math if necessary.

I set an adjustable square to the setback distance from the edge of the door and scribe a line parallel to the edge. Then, use an awl to mark the hole centers to help position the drill bit.

YOU NEED A BIT. Concealed hinges originated in Europe and are metric based. The size of the hole you drill is 35mm. It's close to 1⅜", but that will result in a sloppy fit.

It's best to purchase a 35mm Forstner bit. It's likely you'll be drilling a lot of holes with this bit, so the modest investment is worth it. I use a carbide bit for longer life.

CHOOSE YOUR ADVENTURE. There are two ways to drill the hole: at the drill press or with a dedicated jig. While freehand drilling is technically possible, either the drill press or a jig improve the consistency of the process.

The setup at the drill press is pretty simple. Use a fence to locate the bit using the dimple you made earlier. Just align the spur of the drill bit with the centerpoint and then lock the fence in position.

When drilling the hole, you're aiming for a depth of ½". Setting the drill depth stop adds reliability.

The box below shows the Kreg version of a concealed hinge jig. No matter which jig you have, be sure to read those instructions, as well. Then make a test in some scrap to get the feel of the jig.

▲ A carbide Forstner bit lasts longer than high speed steel bits. I find that running the bit at 1000-1500 RPM results in a smooth, clean hole.

KREG CONCEALED HINGE JIG

Kreg Jig. The gray adjustment cams on the jig allow you to control the setback of the bit in relation to the edge of the door.

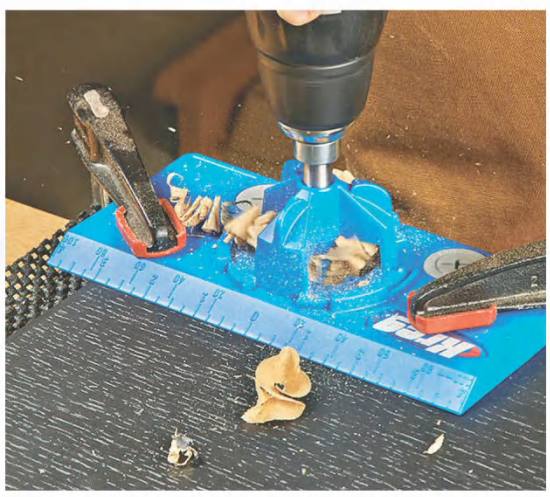

Drill the Hole. Position the jig using the scale. Then clamp it in place to keep the bit from wandering.

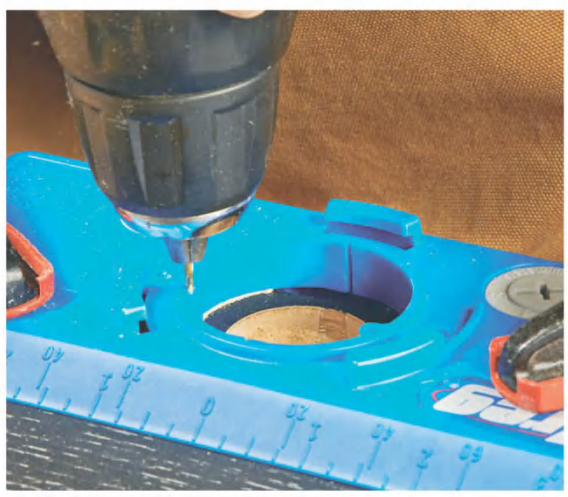

Drill the Pilot Holes. The Forstner bit and guide come off so you can drill the mounting screw holes.

Illustrations: Bob Zimmerman

INSTALLING THE HINGE. In addition to the cup hole, you need to drill pilot holes for the hinge's mounting screws. The key here is to install this hinge component so it's perpendicular to the edge of the door.

If possible, I like to use my square to align the hinge plate when installing the hinge in the door, as shown in step 1 below. Just keep in mind that the shape of the hinge may not allow you to use a square this way. A self-centering drill bit makes it easy to drill the pilot holes for the mounting screws.

▲ A square aligns the hinge so you can drill the pilot holes for the mounting screws. A self-centering bit comes in handy for proper alignment.

INSTALLING THE PLATE

Now you can turn your attention to installing the mounting plate inside the cabinet. As before, taking the time for careful measuring and layout really pays off.

VERTICAL POSITION. When it comes to locating the mounting plates on the side of the cabinet, the goal is for the plates to line up perfectly with the hinges you just installed on the door.

The trouble is, you can't simply use the same offset dimension that you used on the door. That's due to the gap at the top and bottom of the door.

A straightforward approach is to simply factor the gap in when locating the mounting plate. However, an odd sized gap can sometimes lead to working with teeny fractional dimensions.

Rather than measure from the top and bottom of the cabinet opening to position the mounting plates, another option is to measure from the centerpoint out. This guarantees that the door will be centered in the opening and leaves an even overlay (or gap) when the door is installed on the cabinet.

THE SETBACK. Unlike no-mortise hinges, or butt hinges, a concealed hinge sits back from the edge of the cabinet. (It's called a concealed hinge for a reason).

For overlay doors, the setback distance from the front edge of the cabinet is already determined — 37mm (about 1 15/32"). This distance is a standard for a lot of contemporary cabinet work based on the 32mm system. That alone is worth an article or two. For the purposes of this subject, it's helpful to note that with exceptions, the setback is fixed from hinge to hinge.

The biggest exception is when your design includes inset doors. For an inset door, the setback distance is 38mm (1½") plus the thickness of your door. This means that for a ¾"-thick door, the total setback distance is 2¼". The combination square is the tool of choice once again for laying out these centerlines.

NO-FUSS INSTALLATION. To install the mounting plate in the case, center the screw holes over your layout lines. Then drill the pilot holes with the self-centering bit and install the screws.

When you have several doors to install, I like to make a hardboard template. The template has a fence to establish the setback and it's sized to locate the hinge vertically in the cabinet.

▲ After marking the vertical location of the centerpoint of the hinge, you can mark the offset based on whether the door is inset or overlay.

▲ A small piece of double-sided tape helps hold the plate in position while you drill pilot holes. While you want to do careful work, the hinge is easy to adjust so don't sweat it if you're off slightly.

EASY ADJUSTMENT. The two parts of the hinge clip together. At which point, you can make some adjustments to the fit. And this is where concealed hinges can really shine.

The photos and drawings at right show three screws located on the plate that allow you to fine-tune the door's position in three directions. A screw near the front of the hinge allows for side-to-side adjustments.

Slightly farther back is another screw. This one controls the projection of the door in its opening or (in the case of an overlay door) its distance from the case itself.

A screw near the mounting screws shifts the hinge up or down. On some hinges, you may need to loosen the mounting screws to adjust the vertical position. With a few minor tweaks, you can align the door perfectly for a professional look. W

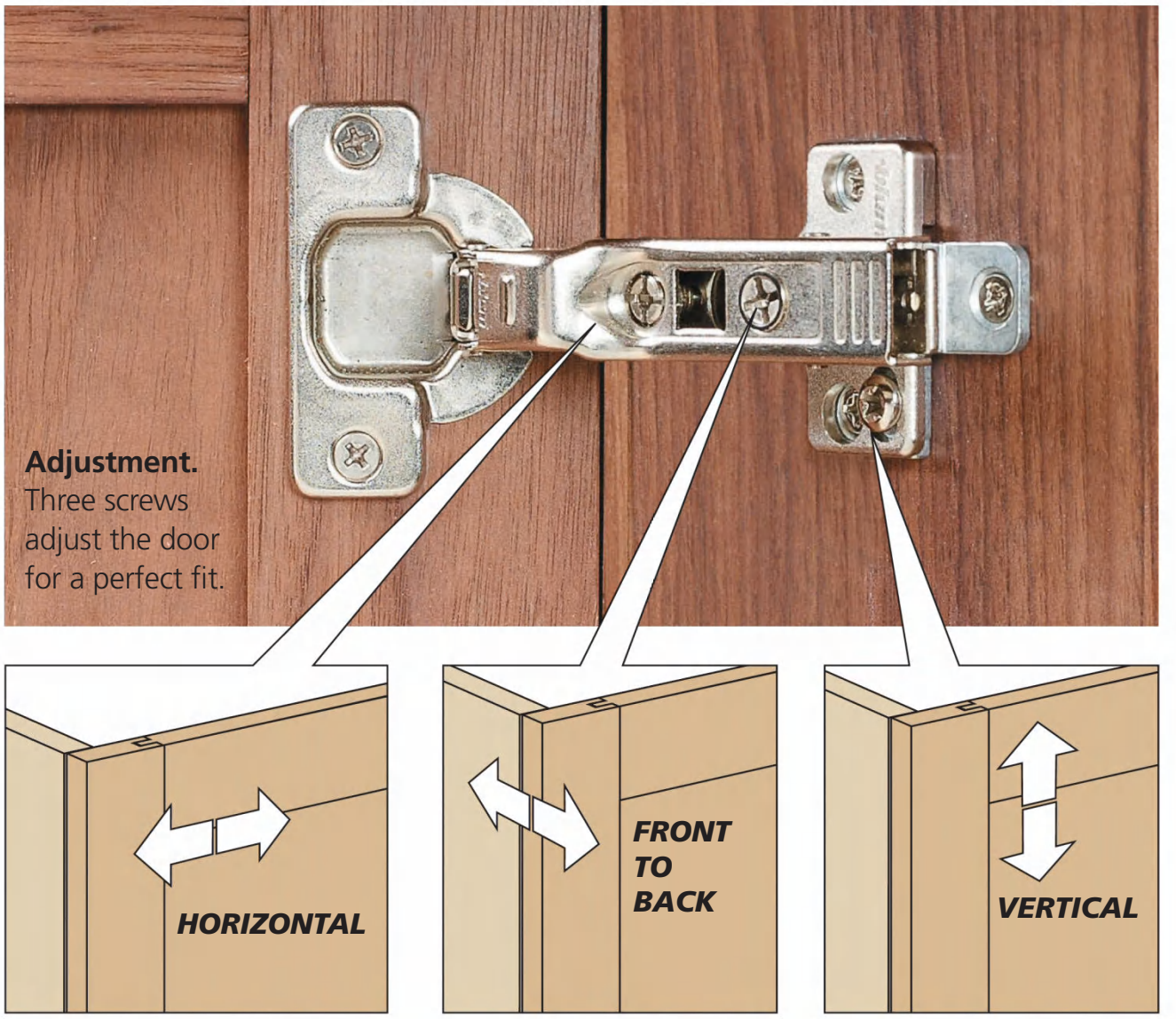

Adjustment. Three screws adjust the door for a perfect fit.

CONCEALED HINGE OPTIONS

Unlike a butt hinge, the concealed hinge you use in a project depends on the application rather than the appearance. The drawings here provide a broad overview of the choices you have.

Case Construction. Consider the type of cabinet you're building. Does it have a face frame or is it frameless?

Door type. Next think about how the door relates to the case. The door can rest within the opening. Or it can overlay the case sides with a half overlay or a full overlay projection.

Gotta Swing. Your final consideration is the extent that the door opens. A 95° swing is bare bones. A hinge with 120° of swing is what I consider a minimum.

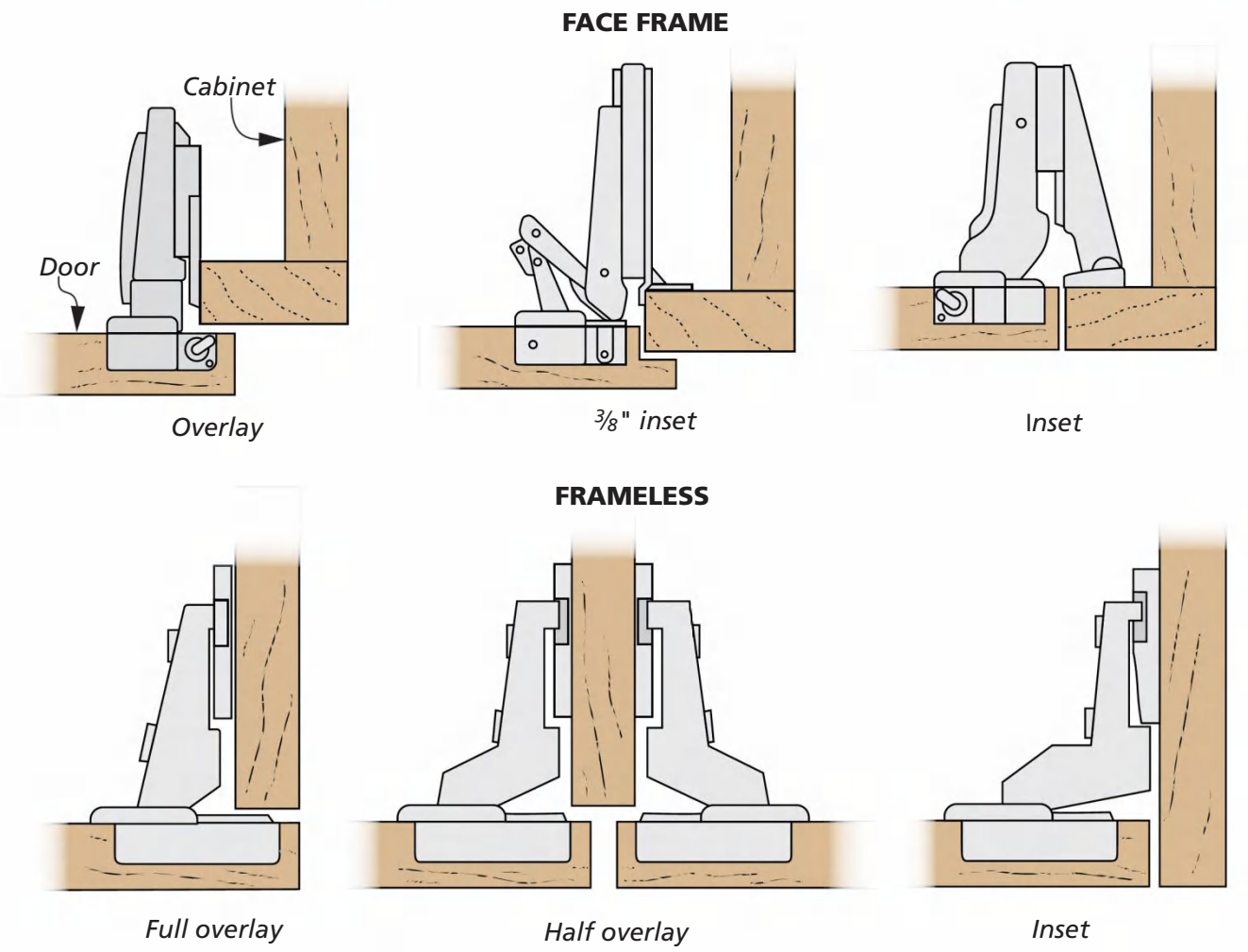

Smart Outfeed Support

Table saws can be a bit deceptive. The large, flat top lulls you into thinking there's plenty of support for any task. Ripping long pieces of stock safely (and accurately) is one of the biggest challenges. Your attention is divided by holding a bulky piece of stock against the rip fence while feeding it into the blade and ensuring your hands are safely out of the way. And how do you keep the long board flat on the saw table throughout the cut? One way to make this tough job easier is with well-placed outfeed support.

Written by: Phil Huber

THE PLUSES. Good outfeed support allows you to concentrate on accurately feeding the stock. When you have perfect control, there's much less chance of something going wrong.

Commercial outfeed stands offer one solution. But I lean towards the shop-made (drawings at right). This support costs next to nothing to build from plywood scraps and the finished product is easy to store.

SET IT UP RIGHT

Your outfeed support needs to be positioned where it will do the most good. The drawings below illustrate my points.

The ideal height of the support depends on the thickness of stock you're ripping. Thick stock (1" plus) won't sag much. So here, I generally set my support level with the table or just a hair below.

You can expect thin or narrow stock to droop a bit. Just drop the support slightly below the saw table to account for this.

PROPERLY ALIGNED. Next, the support stand needs to be properly aligned with the workpiece and parallel to the back edge of the saw table. When I position the stand side to side for a cut, I think about centering the support (more or less) on the workpiece. This way the stand carries both "halves" of the ripped board.

Next, sight across it to make sure it's parallel to the table. If one side is low, it can cause the board to twist and bind against the saw blade or go off line.

THE PERFECT DISTANCE. Once more than half of the board is beyond the table, it will tip. So, place the support close enough to the saw to catch the workpiece before it reaches the tipping point.

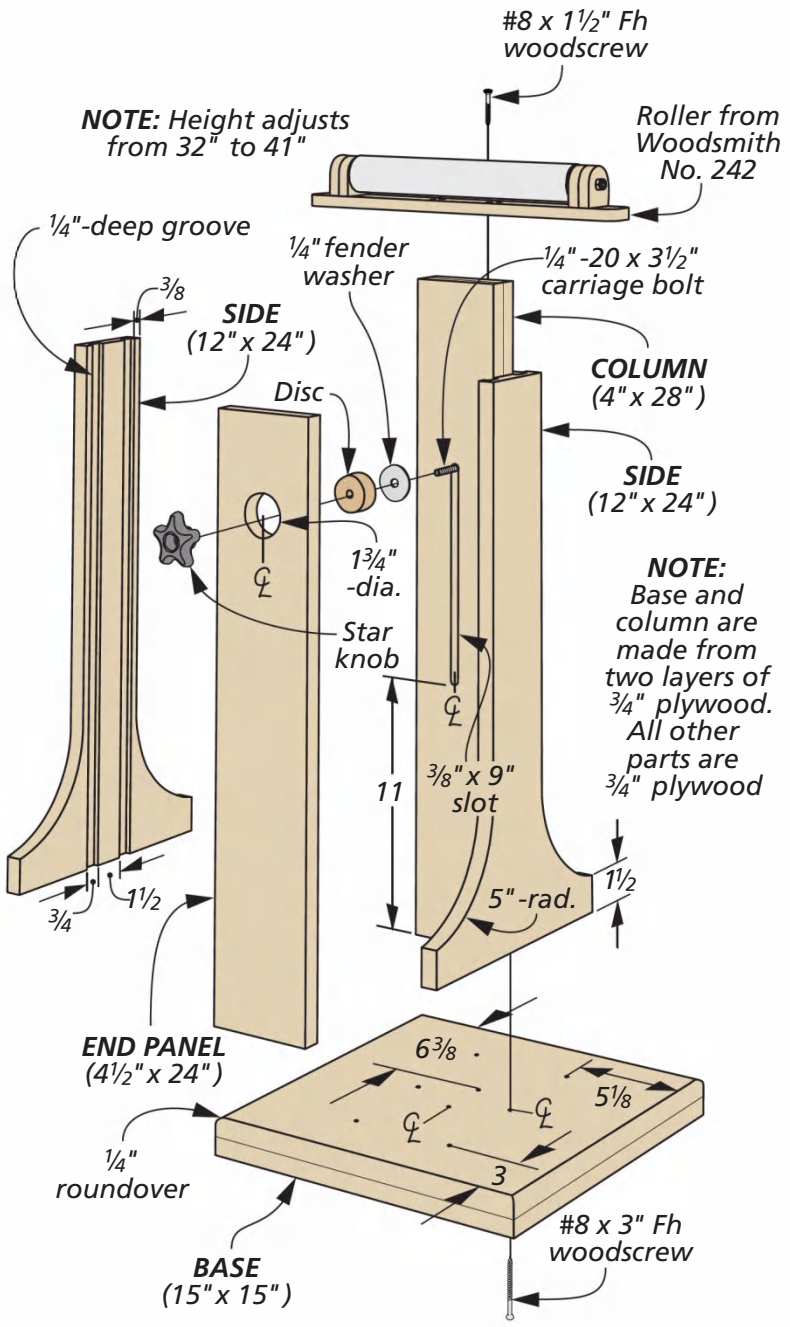

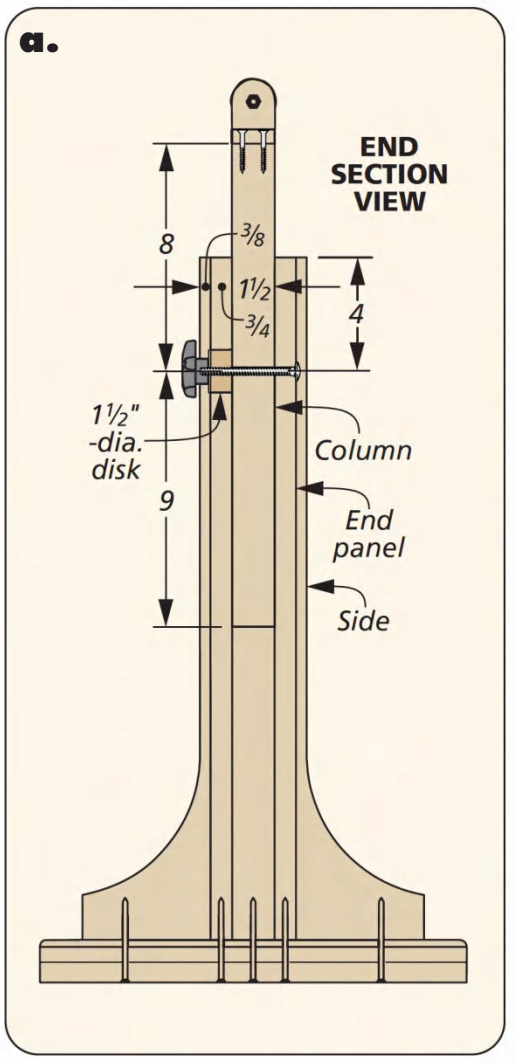

On the other hand, you don't want it to pivot up and off of the saw table. This means you need to avoid placing your outfeed support too close to the table saw.

Positioning the support so that it does the job from the beginning to the end of the cut is actually pretty easy. It turns out that this perfect support position is just a little less than half the length of the board from the back edge of the saw. You can just make a rough guess on this position and it'll work out fine. And now with the outfeed support carrying the load, tough rip cuts are a thing of the past. W

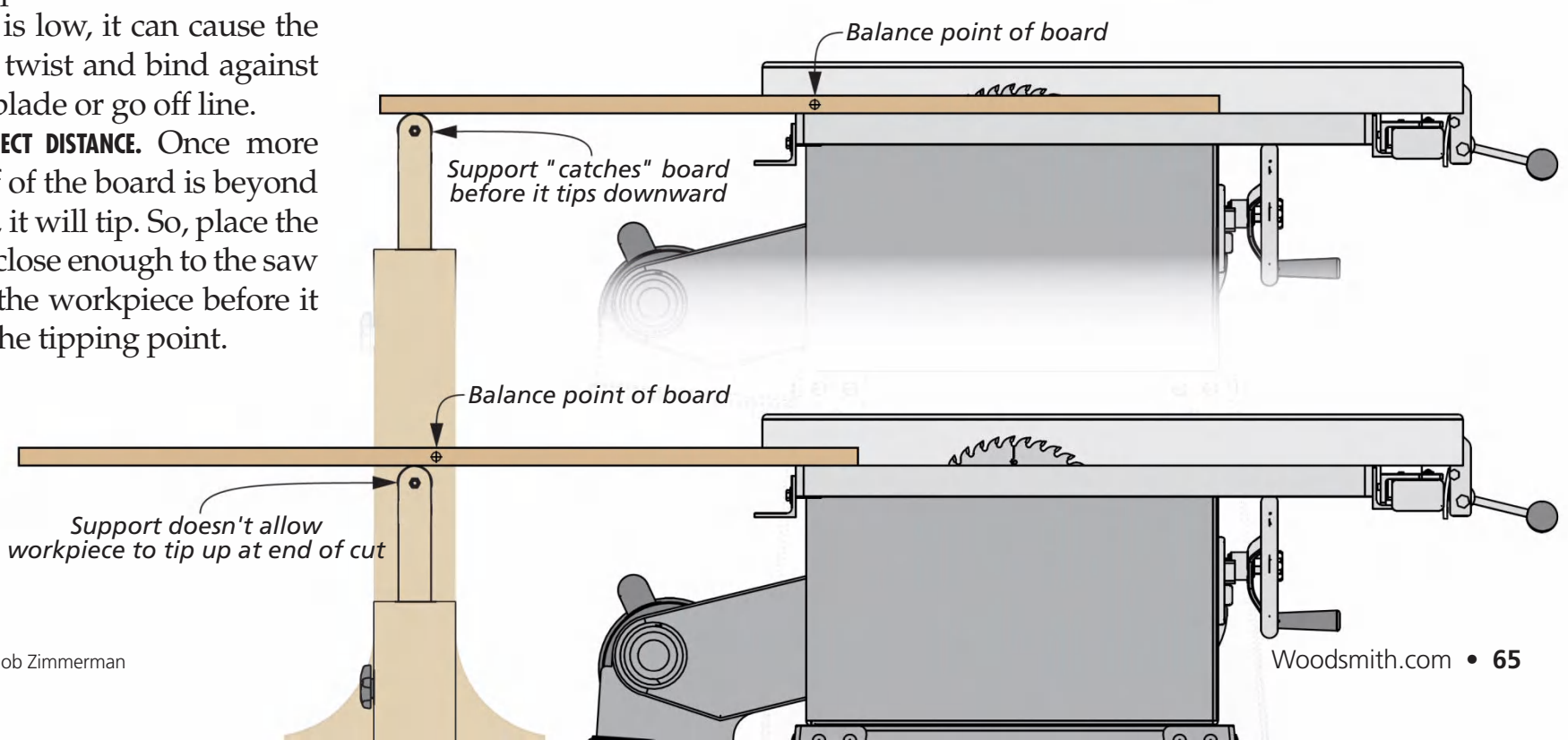

Illustrations: Bob Zimmerman

Sources

Most of the materials and supplies you'll need to build the projects are available at hardware stores or home centers. For specific products or hard-to-find items, take a look at the sources listed here. You'll find each part number listed by the company name. See the left margin for contact information.

MAIL ORDER SOURCES

Project supplies may be ordered from the following companies:

Woodsmith Store
800-444-7527
store.woodsmith.com

Build with Ferguson
833-753-1027
build.com

General Finishes
800-783-6050
generalfinishes.com

The Hinge Outlet
888-250-8133
hingeoutlet.com

Lee Valley
800-871-8158
leevalley.com

Minwax
800-523-9299
minwax.com

McMaster-Carr
630-833-0300
mcmaster.com

Ohio Travel Bag
800-800-1941
ohiotravelbag.com

The Plywood Company
plywoodcompany.com

Rockler
800-279-4441
rockler.com

Tool Marts
toolmarts.com

ROUTER WORKSHOP *(p.18)*

- **McMaster-Carr**
  Bearings . . . . . varies
- **Rockler**
  Bit Sharpening Kit 32355
  Diamond Bench Stone . . . 53396
  Precision Oiler 64982
- **Tool Marts**
  Router Collets . . . . . .varies

BACKPACK & SATCHEL *(p.24)*

- **Ohio Travel Bag**
  1½" Webbing 12-1-1-2-BLK
  Heavy Buckle C-58-1-1-2
  3⁄16" Bolts L-156-3-16BLK
  3⁄8" Bolts. L-156-3-8BLK
- **McMaster-Carr**
  3⁄16" Elastic Cord 8858T21

Both the backpack and satchel were finished with *General Finishes'* oil-based "Seal-a-Cell" on the outside to enhance the color of the walnut. You can build further coats for increased protection and shine. The interior surfaces have a coat of shellac followed by a coat of paste wax.

TOOL CABINET *(p.32)*

- **Rockler**
  Shelf Pins 22781
- **Build with Ferguson**
  1¼" Birch Knob. BP811WD
- **The Hinge Outlet**
  Hinge Mt. Plate . . RI-175H7100
  Hinge. RI-71B375180

The cabinet was given a coat of *General Finishes'* oil based "Seal-a-Cell." After the cabinet dried, it was sprayed with a couple of coats of lacquer.

SNOW SLED *(p.42)*

- **McMaster-Carr**
  2" Webbing (Red) 3510T84

FLAMMABLES CABINET *(p.48)*

- **Lee Valley**
  Rare Earth Magnets . . .99K3215
  S.S. Draw Latch 00S5590
- **McMaster-Carr**
  Flammables Sign 5776T59
  Paper Towel Holder . . .4501T201
  Round Pull Handle . . . 1871A64
  Spring Hinge 1613A4
- **The Plywood Company**
  Exterior Grade Fir 1AB

CONCEALED HINGES *(p.60)*

Concealed hinges are available from most woodworking retailers and home centers.

- **Lee Valley**
  35mm Forstner Bit 25K6073
  Hinge Jig 25K6072

Woodsmith® eTIPS

- **Valuable Video Tips** from the Woodsmith Shop TV Show
- **Quick & Easy Printable Tips** from Woodsmith Magazine
- **Latest Video Plans** from Woodsmith Plans

Sign Up Today For FREE Weekly eTips!

► WoodsmithTips.com ◄

RIKON®

EXPANDING ← The → Possibilities

2021 WOOD MAGAZINE INNOVATE AWARD

5 YEAR WARRANTY

Expandable Bed Lathe | 40" Between Centers Beefy | 3 HP VSR Motor

Beefy **3HP motor** delivers ample power to turn large diameter projects in forward or reverse modes.

Control Box has a magnetic back so that it can be set anywhere along the lathe for quick access when turning.

1-1/4" x 8 TPI threaded spindle is supported by 4 heavy-duty bearings for precise and dependable turning.

Tailstock's quill extends out to a generous **4-3/4" RAM** travel with precision Acme threading.

Call today for more information **877-884-5167**
or visit **www.rikontools.com** for a dealer near you!

SHAPER

See it in action and book a demo

UPGRADE YOUR WORKSHOP

Precision Cutting Simplified

Shaper Origin is an easy-to-use handheld CNC router that brings digital precision to the craft of woodworking. With Shaper Origin + Workstation, you can create perfect box joints, mortise and tenon joinery, and more with ease and accuracy.

Visit shapertools.com

Woodsmith

Back Issue Library **Online**

An Incredible **VALUE!**

- ✓ Access every issue of Woodsmith ever published — over 228
- ✓ Get over 4,000+ projects, tips and technigues.
- ✓ Enjoy instant online access on your computer, laptop — even tablet.

LEARN MORE at www.woodsmithlibrary.com

Sign Up for Free Weekly eTips

Desktop

- Get a video tip sent to you every week
- Includes a printable, step-by-step tip
- Ready when you are — on any device

Laptop

Tablet

Smartphone

Sign up today at Woodsmith.com